Instruction Manual

MTR 225 ACS - MTR 225 ACS DHHS

DIGITAL SYSTEM FOR AUTOMATIC COLLIMATION

Confidential Information

Ralco s.r.l.

MADE IN ITALY

SERIES R 225 ACS DHHS

DATE OF ISSUE:	REVISION LEVEL:	ISSUED BY:
22.12.2008	Y	RALCO DIR / RALCO AQ / RALCO M.T.

LEGAL WARNING

THE INFORMATION CONTAINED IN THIS MANUAL IS CONFIDENTIAL. THE CONTENTS OF THIS MANUAL, INCLUDING RALCO SRL SOFTWARE AND THE COLLIMATOR ITSELF CANNOT BE COPIED NOR REPRODUCED IN ANY WAY.

THE CONTENTS OF THIS MANUAL MUST ONLY BE USED FOR THE PROPER INTENDED USE, FUNCTION AND MAINTENANCE OF THE RALCO COLLIMATOR.

RALCO DOES NOT EXPRESSLY OR IMPLICITLY GRANT ANY PROPRIETARY RIGHTS OVER THE RALCO NAME NOR RIGHTS TO MARKET THE RALCO COLLIMATOR BY ANY OTHER NAME.

RALCO SRL WILL PURSUE ANY AND ALL LEGAL REMEDIES AVAILABLE UNDER THE LAW TO RECOVER DAMAGES INCURRED BASED UPON THE ABOVE VIOLATION(S).

Model		Certifications
R 225 ACS	STANDARD VERSION	CE 0051
R 225 ACS DHHS	FDA CERTIFIED VERSION AVAILABLE ON REQUEST	CE 0051 C US

Revision Level:

The English version of this manual is a translation of the Italian text which prevails in case of doubts.		
Rev. N	**Date**	**N**
A	04.03.2009 28.03.2009	MRE/012/09 MRE/013/09
B	01.04.2009 11.05.2009	MRE/014/09 MRE/010/09
C	24.06.2009 04.08.2009	MRE/018/09 MRE/023/09
D	24.09.2009 07.09.2009 09.09.2009 16.09.2009 13.10.2009 30.10.2009	MRE/029/09 MRE/024/09 MRE/025/09 MRE/028/09 MRE/031/09 MRE/033/09
E	30.10.2009 12.11.2009 23.11.2009	VVS/021/09 VVS/022/09 MRE/040/09
F	04.12.2009 09.12.2009	MRE/043/09 MRE/044/09
G	19.12.2009	MRE/048/09 MRE/049/09
H	19.12.2009	MRE/049/09
I	18.01.2010 21.01.2012 27.01.2010	VVS/003/10 VVS/005/10 VVS/007/10
J	25.01.2010	MRE/005/10
K	01.02.2010 22.02.2010	VVS/010/10 VVS/013/10
L	10.02.2010 22.02.2010	MRE/007/10 MRE/008/10
M	25.03.2010	MRE/011/10 MRE/012/10
N	25.03.2010	MRE/016/10
O	25.03.2010 06.04.2010 09.04.2010 29.04.2010 05.05.2010	VVS/021/10 VVS/022/10 MRE/014/10 VVS/026/10 VVS/027/10

Rev. N	Date	N
P	11.05.2010 25.05.2010 26.05.2010 28.05.2010 19.07.2010 19.07.2010	MRE/021/10 VVS/033/10 VVS/034/10 MRE/026/10 VVS/043/10 VVS/044/10
Q	23.09.2010	MRD/010/10 MRD/011/10
R	21.10.2010	MRD/013/10
S	25.11.2010	MRD/017/10
T	03.02.2011 15.02.2011 21.02.2011 24.03.2011 25.03.2011	VVS/005/11 VVS/009/11 VVS/010/11 VVS/015/11 VVS/016/11
U	21.04.2011	MRD/005/11
V	16.05.2011 20.05.2011 25.05.2011	VVS/021/11 VVS/022/11 MRE/023/11
W	14.07.2011	MRD/013/11
X	28.09.2011 24.10.2011	VVS/027/11 MRD/018/11
Y	09.03.2012 30.10.2012	MRD/006/12 VVS/035/12

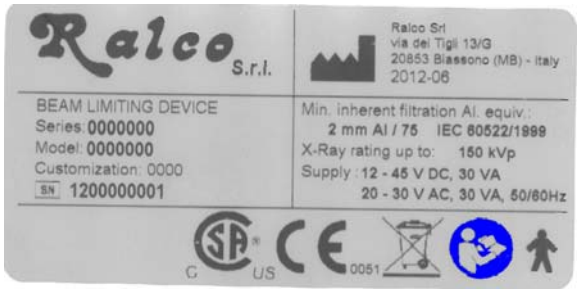

THIS INSTRUCTION MANUAL PROVIDES THE SPECIFICATIONS, DIMENSIONS, AND FUNCTIONS FOR A STANDARD COLLIMATOR. PERSONALIZATIONS ARE AVAILABLE UPON REQUEST. WITH PERSONALIZED COLLIMATORS, THE CUSTOMER MUST ENSURE THE FOLLOWING HAS BEEN PROVIDED:

- YOUR SPECIFIC CODE IS CLEARLY VISIBLE ON THE BACK LABEL AFTER "CUSTOMIZATION", ABOVE THE SERIAL NUMBER, TO ENSURE THE CORRECT PERSONALIZED COLLIMATOR HAS BEEN PROVIDED (SEE ABOVE).
- THE CHAPTER ENTITLED "PERSONALIZATIONS," WHICH INCLUDES RELEVANT INFORMATION REGARDING YOUR PERSONALIZATION.
- OTHER PROVIDED ATTACHMENTS WHICH REFER TO YOUR PERSONALIZATIONS.

CONTENTS

ADVISORY

SYMBOLS

DESCRIPTION
CHARACTERISTICS 6

SPECIFICATIONS

INSTALLATION
TUBE COMPATIBILITY 11
MOUNTING THE COLLIMATOR TO THE X-RAY TUBE.....11
Mounting the Flange 11
Mounting the Collimator to the Flange.....12
Ionization Chamber Mounting.....15
ELECTRICAL CONNECTION.....17
Power Supply Connection 17
Wiring Diagram 19

OPERATION INSTRUCTIONS
RADIOGRAPHY 22
Automatic Square-Field Operation Mode (Long and Cross Shutters).....22
Manual Mode 23
Manual Mode - Key Set 23
EXPOSURE HOLD MODE (RED LIGHT).....24
Inclinometer HOLD Mode 24
Light Field Operation 24

CALIBRATION
CENTERING X-RAY BEAM WITH COLLIMATOR LIGHT 25
LIGHT FIELD TO X-RAY FIELD ALIGNMENT.....26
Vertical Alignment.....26
Longitudinal Alignment (Long) 26
Transversal Calibration (CROSS).....27

ELECTRONIC SYSTEM
RSR008 BOARD.....28
Characteristics 28
GC-LED-5A.....31

SYSTEM START-UP
DESCRIPTION OF CONFIGURATION CONTROLS .35
UPDATING OF FIRMWARE 42
CONFIGURATION VIA SERIAL INTERFACE 42
POTENTIOMETER POSITIONING ALARMS.....42

CANBUS MESSAGES
BOARD RSR008.....44
DESCRIPTION.....44
QUICK START 44
DISPLAY MESSAGES 60
STATUS 0X100 61

COMPLIANCE VERIFICATION
MINIMUM FILTRATION REQUIREMENT 63
Visual Determination of Half-Value Layer (HVL) 63
Quick-Check of Minimum Filtration Requirement at a Particular kVp.....64
Standard Absorber Method 64
VISUAL DEFINITION OF X-RAY VERSUS LIGHT FIELD 65
FIELD SIZE INDICATION 65
CROSSHAIR ALIGNMENT.....65
CHAPTER- ADJUSTMENTS, PARAGRAPH CROSSHAIR ALIGNMENT.....65
LIGHT FIELD ILLUMINATION INTENSITY.....65
EMC COMPLIANCE 67
Electromagnetic Emissions.....67
Electromagnetic Immunity for All Equipment and Systems 67
Electromagnetic Immunity for Non Life-Supporting System 68
Recommended Separation Distances for Non-Life Supporting Equipment.....69

COVER REMOVAL

ADJUSTMENTS
EXTRA-FOCAL SHUTTERS 72
CROSSHAIR ADJUSTMENT 74
LASER LIGHT ADJUSTMENT 75

TROUBLESHOOTING

SUBSTITUTIONS
LED SUBSTITUTION 78
SUBSTITUTION OF SQUARE FIELD MOTORS.....78
SUBSTITUTION OF THE MIRROR 79

SPARE PARTS
R225 ACS/R225 ACS DHHS STANDARD 80
Labels 81
Parts Breakdown 82

OPTIONAL ITEMS
RO 002 Iron Spacer.....83
RO 041 Mylar Mirror 83
RO 063 Final Control Testing 83
RO 074 Customized Housing 84
RO 082 Mirror.....84
RO 096 Customized Wiring 84
RO 107 Customized Knobs 84
RO 111 Customization of Front Panel.....84
RO 203 Auto-Centering Siemens Type Cover 84
RO 210 Aluminium Accessory Guides.....85
RO 240 Focus-Skin Distance Spacer.....85
RO 242/2 Second Laser Cross Projection....85
RO 278 Extra-Focal Shutters.....87
RO 305 Additional Variable Filtration.....88
RO 308 External Board ASR003 89
RO 310 Iris 119
RO 314 Video Camera 125
RO 320 Rotation Device.....126
RO 329 Proximity Sensor 131
RO 330 Connection Cable.....132

RO 337 Camera Mounting Support 132
RO 344 Plastic Spacer Guides 133
RO 356 Shutter Positioning Control.....133
RO 409 Plastic Flange Modification.....133
RO 427 Electronic Measuring Device.....134
RO 436 Mechanical Adaptation for a Lower Collimator.....134
RO 441 Plastic Flange, 50° Rotation 135
RO 442 Plastic Flange, 90° Rotation 135
RO 444 CanOpen Protocol.....135

MAINTENANCE
CLEANING RECOMMENDATIONS 136
DISINFECTION 136
RECOMMENDED MAINTENANCE PROGRAM 136

GENERAL
REPAIRS.....138
END OF LIFE DISPOSAL.....138
WARRANTY.....138
COMPONENTS NOT COVERED BY THIS WARRANTY.....139
DISASSEMBLY 139
TRANSPORT AND STORAGE 139
SAFETY/RESPONSIBILITY 140
RESIDUAL RISKS.....140

ADVISORY

THE FOLLOWING INSTRUCTION MANUAL MUST BE READ AND UNDERSTOOD IN ITS ENTIRETY BY THE INSTALLER AND OPERATOR.

INTENDED USE OF THE COLLIMATOR

THIS COLLIMATOR IS DESIGNED TO BE USED WITH A RADIOLOGICAL SYSTEM PRODUCING IONIZING RADIATION FOR MEDICAL OR VETERINARY USE.

WHOMEVER IS AUTHORIZED TO OPERATE OR SERVICE THE RADIOLOGICAL EQUIPMENT MUST BE THOROUGHLY FAMILIAR WITH THE PROCEDURES RELATED TO RADIATION PROTECTION AND EQUIPMENT USE AND MAINTENANCE.

RALCO IS NOT RESPONSIBLE FOR ANY PERSONAL INJURIES OR DAMAGE TO PROPERTY FROM MISUSE OR UNINTENDED USE OF THIS COLLIMATOR.

THIS MANUAL MUST BE MADE AVAILABLE TO THE INSTALLER AND OPERATOR.

INSTALLER AND OPERATOR RESPONSIBILITY

THE INSTALLER AND OPERATOR MUST VERIFY THAT ALL SAFETY STANDARDS ARE FOLLOWED IMMEDIATELY AFTER INSTALLATION OF THE COLLIMATOR AND BEFORE ANY SUBSEQUENT USE.

ALL PROCEDURES REGARDING THE INSTALLATION AND SAFE USE OF THIS COLLIMATOR MUST BE STRICTLY FOLLOWED.

REPORTING

INFORMATION REGARDING ACCIDENTS THAT HAVE OCCURRED WHILE USING THIS COLLIMATOR MUST BE REPORTED IMMEDIATELY TO RALCO, SRL.

LIMITATION OF LIABILITY

RALCO IS NOT LIABLE IF THE PROVIDED INSTRUCTIONS ARE NOT COMPLIED WITH. FURTHERMORE, RALCO IS NOT LIABLE IF ONE OR SEVERAL OF THE FOLLOWING INSTANCES APPLY:

IF THE UNIT IS SPECIFICALLY DESIGNED PER CLIENT SPECIFICATIONS AND THE CERTIFICATION WAS THE DUTY OF THE CLIENT;

THE COLLIMATOR WAS MODIFIED IN ANY WAY BY THE OEM OR OPERATOR;

THE COLLIMATOR WAS INSTALLED WITHOUT RESPECTING THE INSTRUCTIONS, AS PROVIDED IN THIS MANUAL;

THE COLLIMATOR WAS USED IN A WAY OUTSIDE ITS INTENDED USE;

THE COLLIMATOR WAS NOT INSTALLED BY COMPETENT PERSONNEL;

THE COLLIMATOR WAS NOT OPERATED SAFELY OR IN A WAY CONTRARY TO THE INSTRUCTIONS IN THIS MANUAL;

THE COLLIMATOR WAS NOT SUBJECT TO ROUTINE INSPECTION AND MAINTENANCE BY COMPETENT PERSONNEL;

THE COLLIMATOR WAS REPAIRED WITH NON-RALCO SPARE PARTS;

THE COLLIMATOR WAS USED IN A WAY NOT REASONABLY FORESEEN BY RALCO

RALCO IS NOT LIABLE FOR ANY DIRECT OR INDIRECT DAMAGE CAUSED IF THE PROCEDURES IN THIS MANUAL ARE NOT FOLLOWED.

THE COLLIMATOR DESCRIBED HERE, IS USED ON RADIOLOGICAL SYSTEMS AND IS CLASSIFIED AS A TYPE IIB ACCORDING TO ATTACHMENT IX. THE COLLIMATOR HAS BEEN DESIGNED AND MANUFACTURED IN COMPLIANCE TO ATTACHMENT II OF LEGISLATIVE DECREE, 2 FEBRUARY 1997, N. 46, IMPLEMENTATION OF DIRECTIVE 93/42/CEE OF 14 JUNE 1993 AND SUCCESSIVE MODIFICATIONS APPLYING DIRECTIVE 2007/47/CE.
LIST APPLICABLE STANDARDS AND TO WHICH RALCO ADHERES TO:
EN 60601-1:2006
EN 60601-1-2:2007
EN 60601-1-3:2008
EN 60601-2-54:2009
EN 60825-1:2007
ISO 9001:2008
UNI ESO 13485:2004
21 CFR SUBCHAPTER J (FDA)
8750 01 & 8750 81 (CSA)
CE
*RALCO CAN PROVIDE DOCUMENTATION REGARDING ITS ADHERENCE TO ANY OF THE ABOVE STANDARDS.

EN 60601-1 par. 5

- PROTECTION AGAINST ELECTRIC HAZARDS: "CLASS I" EQUIPMENT.
- PROTECTION AGAINST DIRECT AND INDIRECT CONTACTS: TYPE B EQUIPMENT WITH APPLIED PARTS.
- PROTECTION AGAINST WATER SEE PAGE: "COMMON EQUIPMENT".
- SAFETY OF OPERATION IN THE PRESENCE OF INFLAMMABLE ANAESTHETICS WITH AIR OR OXYGEN OR NITROUS OXIDE: EQUIPMENT NOT SUITED TO APPLICATION IN THE PRESENCE OF INFLAMMABLE ANAESTHETIC MIXTURES CONTAINING AIR OR OXYGEN OR NITROUS OXIDE.
- OPERATION CONDITIONS: EQUIPMENT FOR CONTINUOUS OPERATION AT INTERMITTENT LOADS - SEE CHAPTER OPERATION INSTRUCTIONS.
- SHOULD LABEL DATA ON THE COLLIMATOR NOT CORRESPOND TO THE SPECIFICATIONS HEREIN, INFORM RALCO OF THE NON CONFORMITY.
- VERIFICATIONS OF THE SPECIFICATIONS ARE TO BE PERFORMED ACCORDING TO THE INDICATED EQUIPMENT STANDARDS.

INHERENT DANGER OF X-RAYS
THE COLLIMATOR HAS BEEN CONSTRUCTED TO CURRENT STANDARDS TO MEET THE SAFETY REQUISITES OF DIRECTIVE 2007/47/CE AND ALL OTHER APPLICABLE STANDARDS. HOWEVER, DUE TO RADIOLOGY BEING AN INHERENT DANGEROUS ACTIVITY WHICH CANNOT BE COMPLETELY SAFE GUARDED AGAINST, IT IS CRUCIAL THAT ALL SAFETY PROCEDURES ARE FOLLOWED. THE INSTALLER AND OPERATOR MUST FOLLOW ALL ESTABLISHED PROCEDURES (INCLUDING THOSE MENTIONED IN THIS MANUAL) TO REDUCE THE INHERENT DANGER OF X-RAYS.

THE INHERENT RISK OF USING COLLIMATORS IN RADIOLOGICAL SYSTEMS IS DEEMED REASONABLE AS DETERMINED BY APPLICABLE STANDARDS. THE USE OF COLLIMATORS FOR RADIOLOGICAL SYSTEMS IS STRICTLY REGULATED. RALCO FOLLOWS ALL APPLICABLE STANDARDS. IT IS UP TO THE INSTALLER AND OPERATOR TO ENSURE THAT ALL POSSIBLE STEPS ARE FOLLOWED TO ENSURE THE HEALTH AND SAFETY OF THE PATIENT AND OPERATOR.

SYMBOLS
IN THIS MANUAL THE FOLLOWING SYMBOLS ARE USED:

THE TRIANGLE EMPHASIZES WARNINGS AND CAUTIONARY MESSAGES WHICH ARE IMPORTANT FOR YOUR SAFETY AND/OR EFFICIENT OPERATION OF THE EQUIPMENT. THESE WARNINGS MUST BE STRICTLY COMPLIED WITH.

INFORMATION PROVIDED WITH THE LAMP IS ADDITIONAL ADVICE FOR THE PROPER CONTROL AND PRACTICAL USE OF THE UNIT.

RALCO INSTRUCTION MANUALS ARE AVAILABLE IN TWO VERSIONS: ITALIAN AND ENGLISH.
THE ENGLISH VERSION OF THIS MANUAL IS A TRANSLATION OF THE ITALIAN TEXT WHICH PREVAILS IN CASE OF DOUBTS.

FOR ANY INQUIRES OR NOTIFICATIONS, PLEASE CONTACT US AT:
RALCO, SRL
VIA DEI TIGLI 13/G
20853 BIASSONO, (MB) ITALIA
TELEPHONE: +39 039 2497925
FAX: +39 039 2497799
E-MAIL: RALCO@RALCO.IT

SYMBOLS

	Description	No.	Ref. IEC
	Alternating Current	01-14	417-iec 503
	Direct Current	01-18	417-iec 5031
	Continuous and Alternating Current	01-19	417-iec 5033
	Protective Ground	01-20	417-iec 5019
	Plus; Positive Polarity	01-27	417-iec 5019
	Minus; Negative Polarity	01-28	417-iec 5006
	Input	01-36	417-iec 5006
	Output	01-37	417-iec 5034
	Remote Control	01-38	
	Manual Control	01-45	ISO 7000-096
	Automatic Control (Closed Loop)	01-46	iso 7000-0017
	Iris Diaphragm: Open	01-69	iso 7000-0017
	Iris Diaphragm: Closed	01-70	417-iec 5324
	General Warning Sign	03-02	iec 601-1
	Radiation Filter or Filtration	04-51	417-iec 5381
	Light Indicator of Radiation Field	04-51	417-iec 5381
	Beam Limiting Device: Open	04-55	417-iec 5385
	Beam Limiting Device: Closed	04-56	417-iec 5386
	Beam Limiting Device: Closed with Separate Opening of the Shutters	04-57	417-iec 5387
	Beam Limiting Device with Separate Closing of the Shutters	04-58	417-iec 5388
	Type B Applied Part	02-02	601-i-iec

	Description	**No.**	**Ref. IEC**
	Caution: Laser Radiation		60825-1
	Electrostatic-Sensitive Device		
	Cassette Size Sensing Device		
	Device Requiring Proper Disposal	attch.4	2002/95/CE
	Follow Instructions for Use		ISO 7010-M002

DESCRIPTION

Multilayer, square field, automatic collimation system intended for installation on stationary X-ray equipment. This device has been designed and manufactured for skeletal, gastrointestinal, urographic and thoracic investigations.

The square field is defined by 6 pairs of lead faced shutters contained in the collimator body. Two pairs of shutters are located near the X-ray focus to control the X-ray beam and eliminate off-focus radiation. Two pairs are located on the entrance window. The other two pairs of shutters are positioned near the exit window to provide a sharply defined X-ray field. A key-switch on the rear cover of the collimator allows to select between automatic and manual modes of operation. A set of rail guides inside the collimator allows the insertion of an ionization chamber.

A microprocessor circuit controls the stepper motors and provides the step-less adjustment of the square field dimensions at variable SID.

The field dimensions may be decreased and increased to the desired size by rotating the two knobs on the collimator front panel.

CHARACTERISTICS

Mounting Plane at 80 mm (3.15") from the focus.
Continuous Film Coverage from Min: 00 x 00 cm to Max: 48 x 48 cm at 100 cm (40") SID.
Maximum Radiation Leakage: 150 kVp - 4 mA
High luminosity provided by a **White LED** which simulates the X-ray field.
Minimum Inherent Filtration 2 mm aluminium equivalent.
Accessory Guides are used for accessories and additonal filtration.
Retractable Tape mounted on a radiological unit, measures the distance between the focus and the patient.
Plastic Flange for collimator rotation; 20 mm thickness.
Single Laser for the alignment of the collimator to the receptor.
The collimator has been designed for **an Ionization Chamber** to be included. When the iris option is installed the device is assembled outside of the collimator.
RSR008 electronic board which controls two motors for Cross/Long shutter movements.
GC-Led-5A timer board for light source supply and operation. The board is CanBus controlled.

Fig. R225 ACS Front Panel with Exterior Dimensions

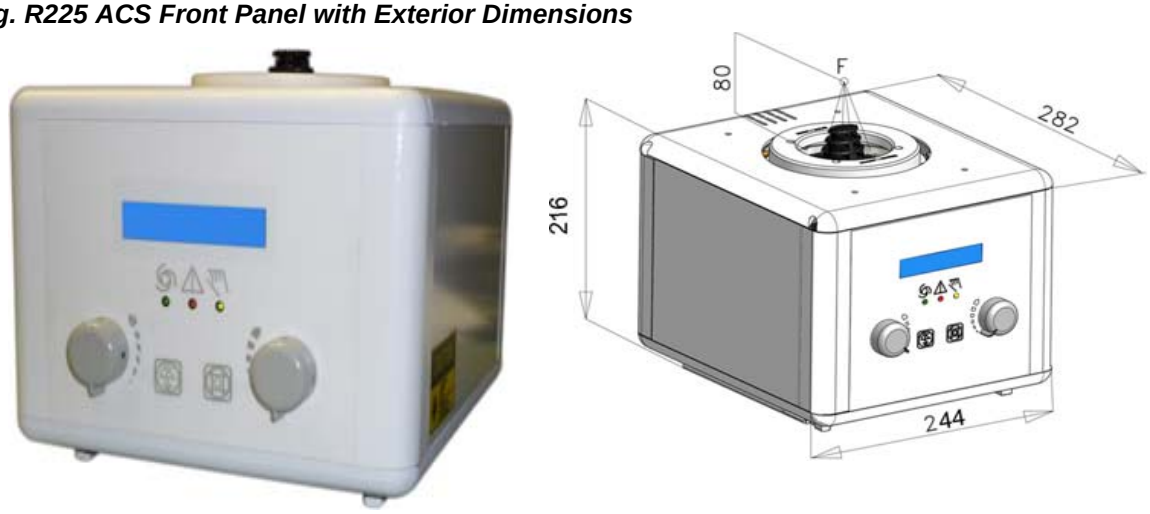

This collimator may have the following optional items; a detailed description is provided in the chapter **OPTIONAL ITEMS**.

RO 002	Spacers for mounting flange; 1.5 mm thickness
RO 041	Mylar mirror, inherent filtration 0.3 mm Al equivalent
RO 063	Final control testing (light intensity, light field/radiation field alignment, radiation leakage, light field border contrast ratio, general funcitonality and electronic)
RO 074	Customized external cover color
RO 082	Mirror 0.8 mm thickness, filtration equivalent 1 mm Al
RO 096	Customized wiring
RO 107	Customized knobs
RO 111	Personalized front panel
RO 203	Auto-centering Siemens cover
RO 210	Aluminium guides for accessories
RO 240	Focus-skin spacers, preventing X-ray exposure too close to the patient
RO 242/2	Second laser, cross projection for patient centering
RO 278	Upper cover with extra focal shutters
RO 305	Additional variable filtration composed of three filters on aluminium disk, 1 mm thickness, automatic selection
RO 308	Interface PC board for Can Bus transmission of analogue signals to the PCB on the collimator
RO 310	Iris device for round field collimation
RO 314	Video camera for a patient monitoring
RO 320	Motorised rotation, potentiometer controlled positioning
RO 329	Proximity sensor
RO 330	Cable extension
RO 337	Mechanical adaptation for the accommodation of a video camera
RO 344	Plastic spacers with support for ionization chamber
RO 356	Positioning control of the shutters through two potentiometers
RO 409	Plastic flange modification + three iron spacers, 1.5 mm thickness
RO 427	Electronic SID measuring device
RO 436	Mechanical adaptation for a lower version of the collimator cover (height 191 cm)

RO 441	Plastic flange with a notch rotating +/- 50°, 20 mm thickness without stop
RO 442	Plastic flange with a notch rotating +/- 90°, 20 mm thickness without stop
RO 444	Software that controls the collimator functions via CANopen protocol.

SPECIFICATIONS

Specifications of the basic version of the collimator are described here below.

Power Supply	24 V AC/DC - 2 A - 50/60 Hz
Fuse for power supply protection collimator. Not supplied by Ralco.	T 4 A
Motor Supplied by Collimator Board	RSR008
Fuse for Power Supply Protection Collimator. Not supplied by Ralco.	n.a.

Software RSR008 Software GC-Led-5A	The software version of the collimator boards is documentated by the Final Control and Testing Form attached to the collimator.
Power Supply, External PCB	n.a.
Fuse for External Board	n.a.

Inherent Filtration Al. Equivalent X-ray beam = 75 kV EN 60601-1-3 par. 7.3; 7.4	Min. Al 2 mm (1 mm on request)
Filtration, Additional X-ray beam = 75 kV EN 60601-1-3 par. 7.5	n.a.
Limitation of Extra Focal Radiation Set Focus Distance, SID 1 m EN 60601-2-54	< 150 mm
Square X-ray Field Selection 100 cm (40") SID - (± 1% SID) EN 60601-2-54	Min: 00 x 00 cm Max: 48 x 48 cm
Round X-ray Field Selection 1 m SID - (± 1% SID) EN 60601-2-54	n.a.
Light Field Indicator Luminosity at 1 m from the focus, field size set at 35x35 cm. EN 60601-2-54	> 160 lx

Light Field Indicator - Contrast Edge Contrast Setting 35x35 cm at 1 m SID EN 60601-2-54	> 4:1
Light Field Indicator Precision Light Field/X-ray Field Correspondence EN 60601-2-54	< 1% SID
Accuracy of X-ray field as shown on the front display versus actual X-ray field dimension.	< 2 mm per side
X-ray Field Indication Precision Settings on an Index Scale EN 60601-2-54	Display: < 1% SID
SID: (optional) Precision of Measurement with Retractable Tape EN 60601-2-54	< 1% SID
Maximum Radiation Leakage Measured at 100 cm with X-ray Beam = 150 kVp - 4 mA EN 60601-2-54	< 40 mRh

Potentiometers **Square Field** Round Field	1 turn - 1 Kohm 1 turn - 1 Kohm
Maximum Load for Accessory Guides GUIDES FOR ACCESSORIES (IF ASSEMBLED): PRIOR TO INSERTING ACCESSORIES IN THE GUIDES CHECK ON THE PERFECT ATTACHMENT OF THE SUPPORT WITH THE MOUNTING SLOT ON THE COLLIMATOR (TOLERANCE MAX. ± 0,5 MM). A FAULTY ATTACHMENT COULD BE DANGEROUS AND IT COULD CAUSE THE FALL OF ACCESSORIES	Static Load: 70 N (about 7.1 Kg) Dynamic load: 15 N (approx. 3.06 Kg) Guide plate dimension: 177.5 mm x 170 mm
Operation Environment • Ambient Temperature • Relative Humidity • Atmospheric Pressure	10°- 40°C 0%- 75% 700 - 1060 hPa
Storage • Temperature • Humidity • Atmospheric Pressure	-40° - 70°C 10% - 95% 500 - 1060 hPa
Weight	11 Kg
Dimensions	L: 285 mm W: 244 mm H: 202 mm

INSTALLATION

TUBE COMPATIBILITY

- Using the dimensions in ***Fig. Tube Compatibility*** below, ensure the near port shutters can be inserted in to the X-ray tube port.
- Check that the tube housing literature indicates congruent minimum inherent filtration (1 mm) and, that maximum radiation leakage is 30 mR/hour measured at 1 m from the source when operating at its leakage technique factors (150 kVp - 4 mA).
- Source values (tube housing-collimator) must not be less than 3 mm Al for filtration and must never exceed 100 mR/hr for radiation leakage [21 CFR sub-chapter J, part 1020.30 (m) (1)].
- The distance between the X-ray tube focus and the flange mounting plane (collimator upper plate) must be: 80 mm (3.15"), tolerance +/- (0.04”).

Fig. Tube Compatibility

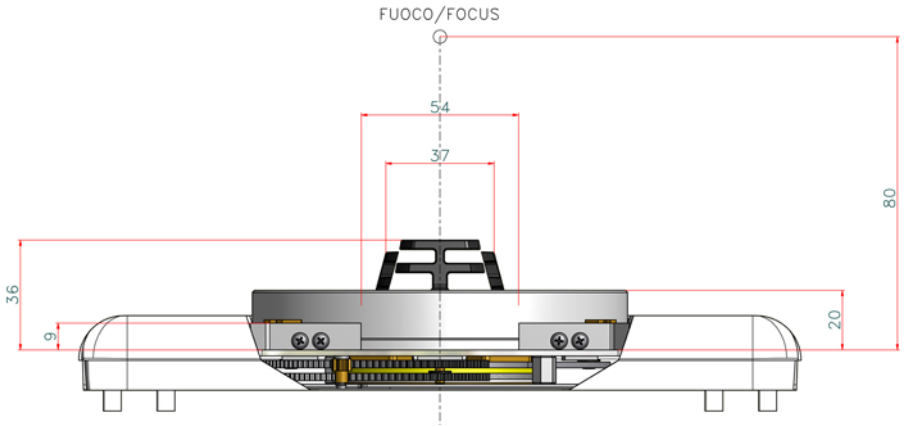

MOUNTING THE COLLIMATOR TO THE X-RAY TUBE

CAREFULLY FOLLOW THE MOUNTING INSTRUCTIONS AND MAKE SURE THAT THE COLLIMATOR IS CORRECTLY ASSEMBLED. INCORRECT MOUNTING COULD BE DANGEROUS: IT COULD CAUSE THE COLLIMATOR TO FALL OR TO OPERATE INACCURATELY.

Mounting the Flange

- Use the X-ray tube housing literature to determine the distance from the focal spot to the tube port face.
- Subtract the resulting distance from 80 mm (3.15") and determine the number of 1.5 mm (0,06") spacers that, combined with the thickness of the mounting flange (20 mm), will make up the difference. Allowable tolerance is 1 mm. (0.04"), see ***Fig. Mounting Flange*** in this Chapter.
- Make sure that the flange is supplied with collimator.
- The collimator/X-ray tube mounting flange shows the letter F "front/knob". Place the flange with the letter turned toward the X-ray tube front, see ***Fig. Mounting Flange*** in this Chapter.
- Mount the flange and spacers to the tube port with 4 screws that must be long enough to be driven into the tube port face for *at least 5 threads*.
- Tighten the screws.

IMPORTANT
TO SAFEGUARD THE OPERATOR AND PATIENT AGAINST THE HAZARD OF A FALLING COLLIMATOR, THE FOLLOWING INDICATIONS MUST BE RESPECTED.

Mounting the Collimator to the Flange

- Unscrew the four mounting Allen screws until the four tabs are withdrawn from the collimator top opening, see ***Fig. Mounting Flange*** in this Chapter.

WHEN UNSCREWING THE ALLEN SCREWS WHICH CONTROL THE TABS, DO NOT USE FORCE EXCEEDING 0,55 NM.
UNSCREW WITH CARE SO AS NOT TO DAMAGE THE FIXING TABS.

- Manually adjust the collimator shutters to their widest setting. This ensures the near-port shutters when fully open, do not contact the side of the X-ray tube housing.
- Carefully couple the collimator with the tube: make sure that the primary near-port shutters have enough clearance to move in the port opening and in the mounting flange, see ***Fig. Tube Compatibility*** in this Chapter.
  For the collimator to rotate to position "Ø", two of the four tabs retract to allow to rotation.
  Adjust and tighten the four Allen screws as follows:
  screws 1 and 3 = 7 turns until the tongue touches slightly the flange;
  screws 2 and 4 = 5½ turns exactly;
  See ***Fig. Mounting Flange*** in this chapter. Please Note: If Allen screws "2" and "4" are tightened more than 5 ½ turns, the collimator will *not rotate*.
- The collimator control tabs conform to **EN60601-1**. Secure the tabs along the edge of the mounting flange but do not lock them. Excessive tightening of the tabs prevents collimator rotation.

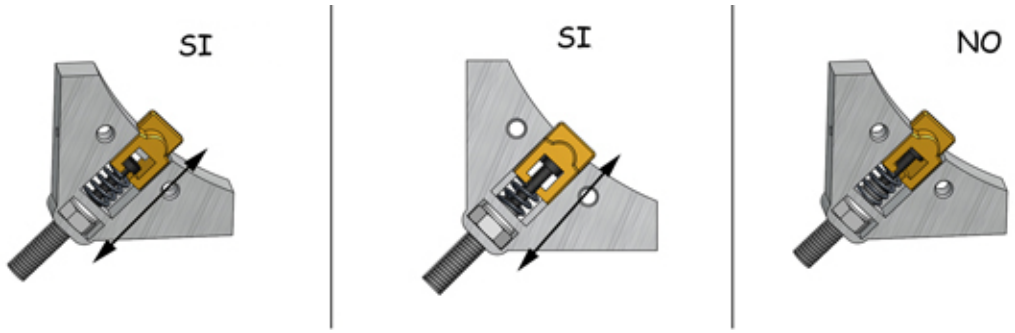

- Check that the distance between the collimator housing and the mounting flange is equal in all directions and, that the collimator face is parallel to the table axis.
- Loosen the screws and adjust if required.

Fig. Mounting Flange

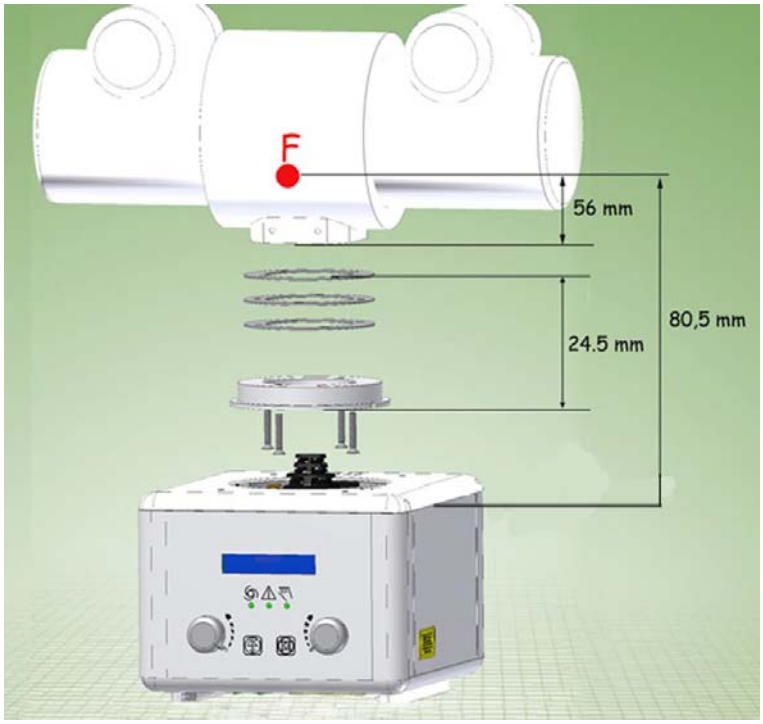

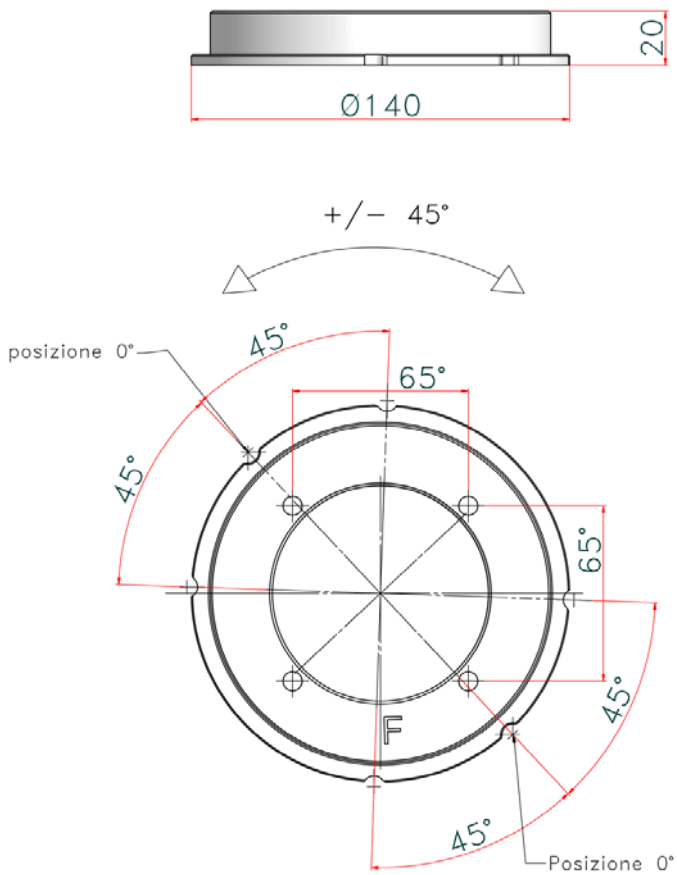

The 6 incisions on the mounting flange edge indicate the collimator positioning to the X-ray tube (Ø and -/+45°).

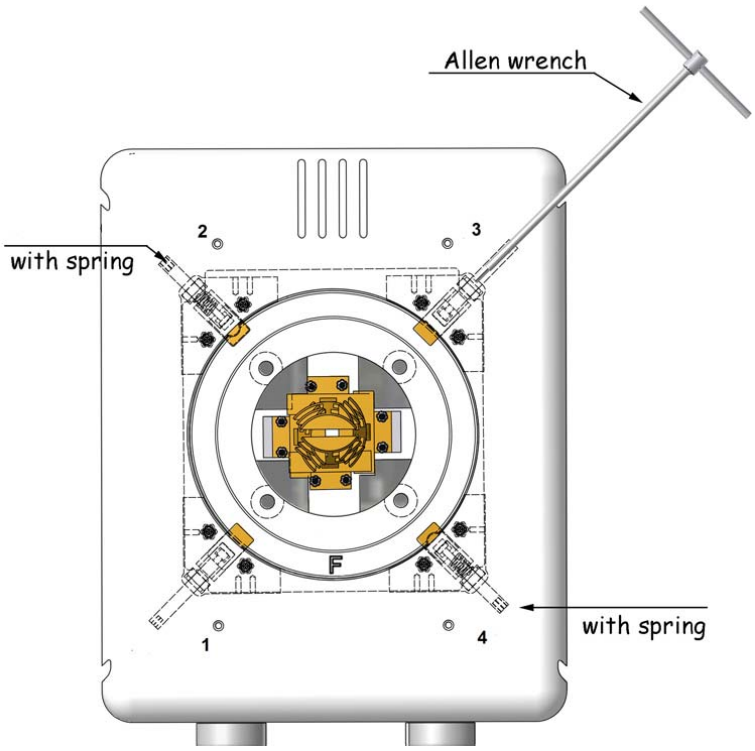

Screws 1 e 3= 7 turns until the tongue touches slightly the flange.

Screws 2 e 4= from position completely open, tighten 5½ turns to ensure collimator rotation. Tighten these screws to stop collimator rotation.

Ionization Chamber Mounting

This collimator is designed for an ionization chamber with an inter axis of 177.5 mm.

- Remove the front panel, see Chapter - **COVER REMOVAL**.

- Disconnect the connector.

- Turn the collimator over and unscrew the four screws.

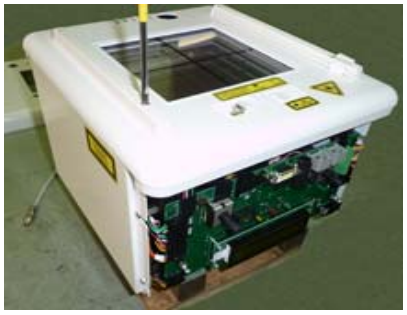

- Remove the tape stop by lifting it off with a screw driver. Gently ease the tape into its container within the collimator.

- Insert the ionization chamber between the two rails and mount lower part of the cover.

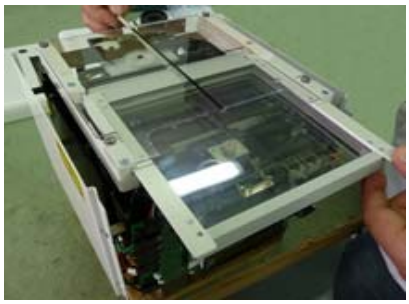

- Connect the DAP to board RSR008 and re-mount the cover in reverse order.

ELECTRICAL CONNECTION

THE WIRING DIAGRAM INCLUDED IN THIS CHAPTER REFERS TO THE STANDARD PRODUCT. IT IS THE RESPONSIBILITY OF THE CUSTOMER WHO HAS REQUESTED AN ELECTRIC CUSTOMIZATION, TO ENSURE THAT AN ELECTRIC DIAGRAM RELATING TO THE CUSTOMIZATION HAS BEEN PROVIDED WITH THE DOCUMENTATION.

THE DEVICE MUST BE EXCLUSIVELY CONNECTED TO POWER NETWORK, WITH EARTH PROTECTION, IN ORDER TO AVOID A RISK OF ELECTRICAL SHOCK.

THE DEVICE IS PROJECTED TO OPERATE WITH A PERMANENT POWER SUPPLY PRESENT SO THE PROCEDURE OF SWITCHING OFF THE COLLIMATOR IS NOT FORESEEN.
NO RISK OR DEVICE DAMAGE WILL OCCUR IF THE MACHINE IS ACCIDENTLY SWITCHED OFF.

Supply and signals to the collimator must be to 2007/47/CE standards. Devices that supply to the collimator must therefore feature double or reinforced insulation as provided by the General Standard on Electro-medical Equipment CEI62-5 +A2 (EN 60601-1).

The device is electrostatic sensitive, consequently all the relating safety standards must be complied with.

COLLIMATOR MUST BE SUPPLIED AS SPECIFIED, SEE CHAPTER- **SPECIFICATIONS.** THE SUPPLY MUST COME FROM A SEPARATE SOURCE FROM THE POWER NETWORK THROUGH DOUBLE INSULATION OR REINFORCED INSULATION AND WITH LIMITED CURRENT. TRANSFORMER CHARACTERISTICS MUST CONFORM TO THE REQUIREMENTS OF STANDARD IEC 60601-1.

CABLES AND TERMINALS USED FOR THE INTERNAL CONNECTION OF THE COLLIMATOR MUST BE SUITABLE FOR OPERATION AT TEMPERATURES OF 70°C AND COLLIMATOR CURRENT ABSORPTION.

Power Supply Connection

- Remove the part of cover to access the terminal, see Chapter- **COVER REMOVAL**.
- Connect supply cables to the relative collimator terminals and earth on the screw marked with the relating symbol: ⏚ . Use the protective earth cable with green/yellow insulation.
- In collimators with a free cable stop, remove the cable stop, connect the supply cables, remount and then secure the cable stop.

- Remount the cover.

INCORRECT POWER SUPPLY COULD DAMAGE THE ELECTRONIC TIMER AND/OR THE LIGHT SOURCE.
SUPPLY MAY BE EITHER IN ALTERNATE OR DIRECT CURRENT.
MAKE CERTAIN THAT POLARITY IS RESPECTED.

Wiring Diagram

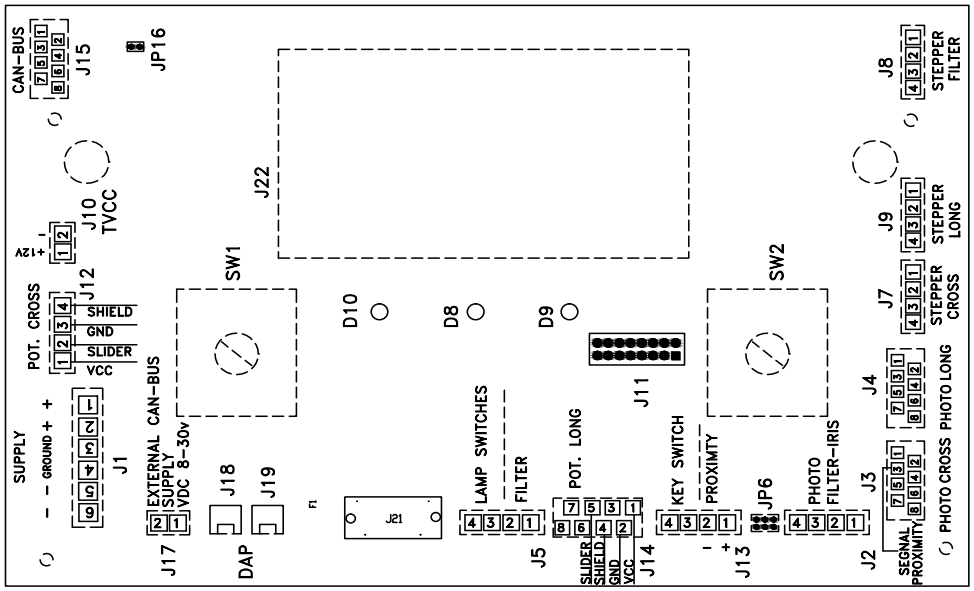

POSIZ.	DENOMINAZIONE	N° PEZZI	CODICE
12	PUSH BUTTON	2	MP11716
11	OPTO SWITCH	2	MP11567
10	CONNECTOR FEMALE 2 WAYS AMP (CON1)	1	MP11396
9	CONNECTOR MALE 2 WAYS AMP (CON2)	1	MP11397
8	ELECTRONIC BOARD GC-LED-5A	1	MP11797
7	FAN 5V DC	1	MP11776
6	LED	1	GE00093
5	ELECTRONIC BOARD RSR008	1	MP11788
4	MANUAL KEY SWITCH	1	MP11757
3	DIODE LASER (D)	1	MP11761
2	MOTOR STEPPER 17PM (ML-MC)	2	MP11903
1	ELECTRICAL WIRING	1	GE00571

REV.	DATA	MRM	DESCRIZIONE
G	15/12/10	056/10	Revisionato ovvo
H	17/02/11	007/11	Completata scheda
I	24/02/11	008/11	Sostituito il gruppo ovvi

DISEGNATO: Elisa Nova
CONTROLLATO: Alessandro Pizzagalli
PROGETTO:
DATA: 28/05/10
PAG.: 2DI2
QUALITA':
FORMATO: A3
DENOMINAZIONE
R 225 ACS DHHS
N. COD.
225E005

Ralco s.r.l.

RALCO s.r.l. A TERMINI DI LEGGE EGLI VIETA DI IMPRODURLO O COMUNICARLO A DITTE CONCORRENTI O AD ALTRE SENZA LA SUA ESPRESSA APPROVAZIONE.

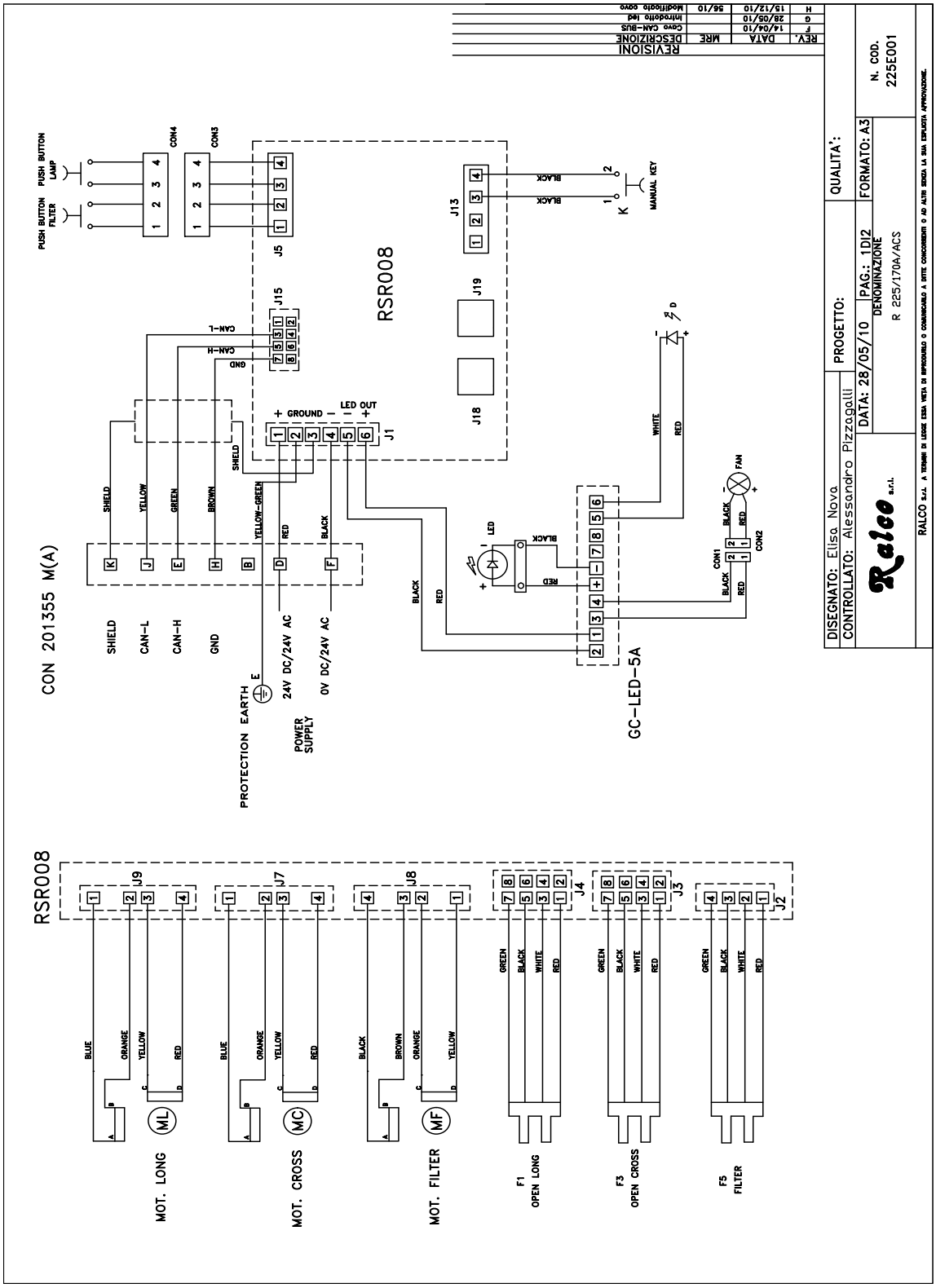

R225 ACS/R225 ACS DHHS - Installation

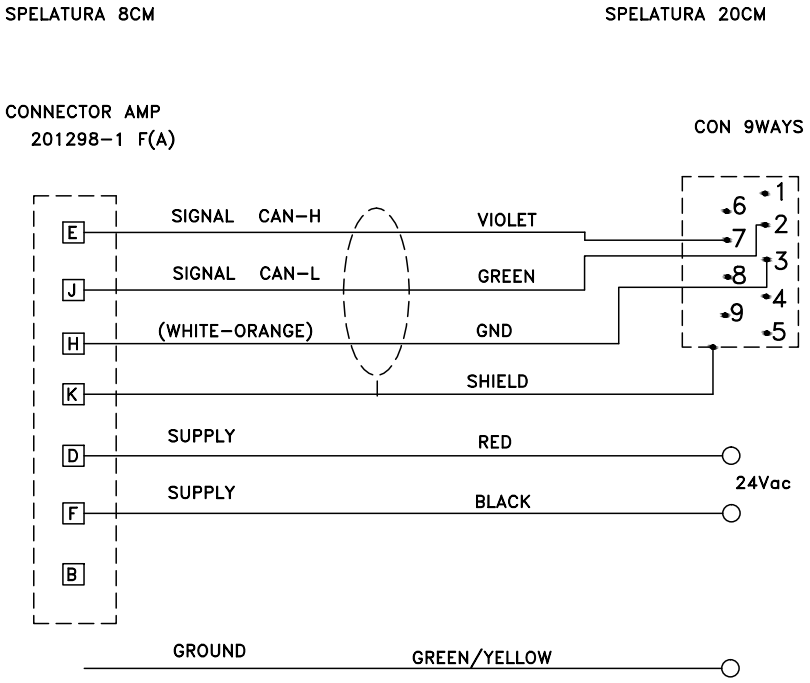

REVISIONI

REV.	DATA	MRE	DESCRIZIONE
A	25/03/10		Modificato cablaggio
B	23/03/06	40/10	Sostituito cavo
C	15/12/10	56/10	Modificato cavo

POSIZ.	DENOMINAZIONE	N° PEZZI	CODICE
5	CONNECTOR 201298-1	1	MP11451
4	WIRE	10 MT	MP12222
3	CONNECTOR SHELL	1	MP11429
2	CONNECTOR DB9 FEMINE	1	MP11533
1	ELECTRICAL WIRING	1	GE00619

DISEGNATO: Tucci Davide
CONTROLLATO: Ale Pizzagalli

PROGETTO:

QUALITA':

Ralco s.r.l.

DATA: 27/02/12 PAG. 1DI1 FORMATO: A4

DENOMINAZIONE
CAVO R 225 ACS DHHS

N. COD.
225C002

QUESTO DISEGNO E' PROPRIETA' ESCLUSIVA DELLA RALCO s.r.l. A TERMINI DI LEGGE ESSA VIETA DI RIPRODURLO O COMUNICARLO A DITTE CONCORRENTI O AD ALTRI SENZA LA SUA ESPLICITA APPROVAZIONE.

OPERATION INSTRUCTIONS

This collimator is intended to be used for Radiography. It can be operated in automatic mode or manual mode. The following section describes generally how each mode works. This section also describes how to operate the light field.

The three different colored LEDs (red, green, and yellow) tell the user in what mode the collimator is functioning and whether any errors/dangerous operating conditions are present.

Red LED Exposure **HOLD**	• The SID in use is too short for the cassette in use; max. opening of shutters: 43x43 cm at 90 cm - i.e. the shutters are at end run but the motors are still running to attain a correct position. • Motors are moving to their correct position.
Increase **SID**	• The collimator will automatically adjust the field, etc.
Green LED **READY**	• The system is ready. • All pre-set functions are allowed.
Yellow LED **MANUAL**	• X-ray field not enabled. • The system has no SID signal. • SID signal below or over the minimum and maximum set value. • Collimator inclination exceeds +/-3°. • Key switch (back of collimator) is turned to the Manual Mode. • Manual Mode selected.

Prior to operating the collimator, check the settings related to correct X-ray beam functions.

SHUTTERS CANNOT OPEN TO COVER A FIELD LARGER THAN THE SET FIELD.
IF THE SYSTEM IS IN THE MANUAL MODE - LATERAL POSITION (+/- 90°), THE DISPLAY WITH READ THE LAST SID ENTERED AND THE LAST FIELD SIZE.
IF THE SYSTEM IS IN A VERTICAL POSITION, THE DISPLAY WITH PROVIDE SHUTTER POSITION INDICATIONS.

RADIOGRAPHY

Automatic Square-Field Operation Mode (Long and Cross Shutters)

Collimator in the Vertical Position

- The collimator must be vertical, ± 3°.
- The collimator automatically sets to cassette dimension.
- The display indicates the SID selected, type of filter selected if the collimator assembles filters, Long and Cross (and iris dimensions, if the collimator assembles the round field feature).
- The green LED on the front panel serves to indicate that the unit is read.

The operator can:

- Turn the field light ON by activating the related push-button on the front panel or via the external control.
- Reduce the set field using the knobs or push-buttons on the front panel or via CanBus.
- The field may be resized within the limits of the field-size set automatically.
- If the shutters close completely, the output contact signalling "shutter closed" will be activated.

- If present, vary additional filtration by selecting the filters by activating the related push-button on the collimator front panel or via CanBus.
- Control from the collimator provides a sequential selection. CanBus control provides sequential or random filter selection.
- Vary SID selected keeping the field size automatically constant.

Collimator in the Lateral Position

- The collimator must be turned left toward the lateral Bucky: -90° left, +90° right; ± 3°.
- One of the 5 SID lateral switch contacts must be closed.
- Left or right cassette inserted.
  The collimator automatically sets the cassette dimensions.
- The key in the vertical position.

The operator can:

- Turn the light field light ON by activating the related push-button or via CanBus.
- Vary the set field size.
- Vary SID in use (selecting one of the 5 fixed SIDs) and keep the set field size automatically constant.

Manual Mode

The collimator is in the manual mode if:

- The collimator is inclined at an angle exceeding 3° and less than 87°.
- Manual control is selected.
- The cassette-IN micro switch is open.
- The Bucky provides no information regarding cassette format.
- No SID signal is present.

When the system is in the Manual Mode, the yellow LED on the front panel is lit and the output contact is activated.

The x-ray contact is always closed.

The operator can:

- Turn the light field ON by pressing the related button on the front panel.
- Reduce field directly with the knobs or push-buttons related to shutter opening.
- Check on opening with the light field.
- Increase the set field with the knobs or the shutter-related knobs or push-buttons.The field may be opened to the maximum mechanical opening or, if CanBus controlled, to the setting fixed during the installation of the system.
- Check the opening with the light field or display reading.
- Vary the setting of the SID in use using push-buttons + and - on the front panel.

Manual Mode - Key Set

The system is set to the Manual mode if the key switch on the rear of the collimator is turned to OFF.

- When the system is in the Manual Mode, the yellow LED on the front panel is lit and the output contact is activated.
- Display indicates the last cassette format memorised, SID and filter value.
- The X-ray contact is always closed.

The operator can:

- Turn the light field ON by pressing the related button on the front panel.
- Change filter position.
- Reduce the set field size directly with the knobs; the push-buttons are not enabled.

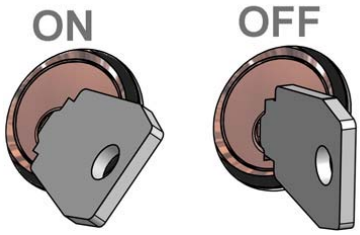

EXPOSURE HOLD MODE (RED LIGHT)

The systems sets to EXPOSURE HOLD:

- In cases of incorrect operation conditions.
- When the system is in the automatic mode and the shutter motors are operating to reach the selected position.
- If the system fails to reach the selected position.
- The LED is lit and the output contact is activated.
- The exposure contact is open.

Inclinometer HOLD Mode

- The control to exclude the inclinometer deactivates the signals from the device for angulation detection. Consequently, the system could remain in the automatic mode even though it might not be in a vertical position. This forces the collimator to operate in a vertical position.
- The deactivation of this control causes the system not to calculate the signal from the angulation device on the PCB located within the collimator.

Light Field Operation

⚠	PROLONGED LIGHTING WITHOUT ALLOWING THE LAMP TO COOL CAUSES THE COLLIMATOR TO OVERHEAT IN THE AREA NEAR THE LAMP. FOR EMERGENCIES: MAXIMUM LIMIT ADVISED IS 5 SUCCESSIVE LAMP OPERATIONS. ALLOW THE COLLIMATOR TO COOL (ABOUT 10 MIN.). THE OPERATOR MUST AVOID OVERHEATING THE COLLIMATOR AND CARE MUST BE TAKEN NOT TO SCORCH HIMSELF OR THE PATIENT.

The collimator is normally operated by activating the push-button on the front panel to switch the light field ON.

The collimator has been designed to operate as follows:

- Supply constantly connected during operation of the equipment.
- Lamp ON time: ON time is pre-set in factory to 30s (tol. 20%).
- A normal lamp ON / OFF cycle is established at 2 sequences followed by 4 minutes to allow for cooling (i.e. 1 minute ON / 4 minutes OFF).
- The field is set automatically by external electronics. For field reduction use the knobs on the front panel and check the dimension on the display or using the light field.
- The ability to make an exposure is controlled by the electronics that control the collimator. This acts as a fail safe to block any exposure if there is any problem with the collimator.

CALIBRATION

THE FOLLOWING PROCEDURES REQUIRE THAT X-RADIATION BE PRODUCED. TAKE ADEQUATE PRECAUTIONS TO MAKE CERTAIN THAT NO PART OF THE HUMAN BODY IS EXPOSED TO X-RADIATION, DIRECT OR INDIRECT.

CENTERING X-RAY BEAM WITH COLLIMATOR LIGHT

- Place a 35 x 43 cm. (14 x 17") cassette on the table top or other flat, horizontal surface.
- Position the X-ray tube/collimator assembly with the focal spot at 1 meter (40") over the cassette with the X-ray beam perpendicular to the cassette surface. Do not use measurement indicators on the system as reference values, but measure the distance from the focal spot to the cassette surface with a tape measure of similar device.

IF THE DISTANCE OF 1 M SID CANNOT BE DETERMINED, USE THE SID VALUE CLOSEST TO ONE METER AND CALCULATE THE MEASUREMENT TOLERANCES AS THE APPROPRIATE PERCENTAGES OF THE DISTANCE.

IF THE X-RAY BEAM CANNOT BE POSITIONED VERTICALLY USE CLAMPS, MASKING TAPE, OR OTHER MATERIAL AS REQUIRED TO POSITION THE X-RAY TUBE AND IMAGE RECEPTOR. THE X-RAY TUBE AND THE IMAGE RECEPTOR MUST BE SET OUT AT THE SPECIFIED SID DISTANCE PERPENDICULARLY TO THE X-RAY TUBE AS DESCRIBED IN THE FOLLOWING PROCEDURE.

- Use the collimator light to center the cassette in the field.
- Mark the location of the cassette with masking tape or other means so that it may be removed and replaced in the same position.
- Place white paper on top of the cassette to provide maximum contrast for the light field.
- Set the collimator to provide a field size of 30 x 30 cm. (12” x 12") at 1 meter (40").
- Activate the light field and use it to position 18 coins as shown in the diagram.
- Position each pair of coins touching one another so that the inner coin is lighted as much as possible and the outer coin is lighted as little as possible.
- The points where the coins contact will define the edges of the light field.
- The extra two coins are to be set:
    - One in a corner to ascertain film position.
    - The other at the intersection of the diagonals to define film center.

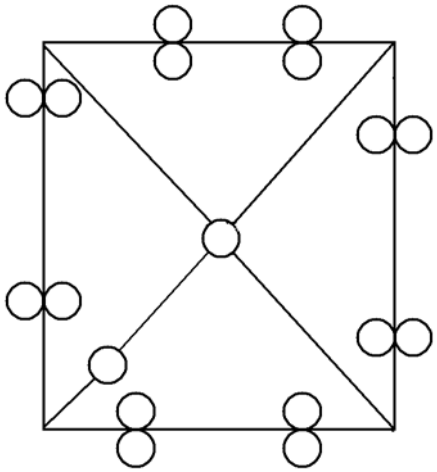

- Set the X-ray generator to produce a density of about 50 kVp, 5 mAs.
- Make an exposure.
- Remove the cassette and process the film.
- Use the test film to check the alignments described below.

THE HEEL EFFECT WILL CAUSE THE FIELD TOWARD THE CATHODE TO BE SLIGHTLY LESS SHARP THAN ON THE OTHER THREE SIDES. THIS IS NORMAL AND CANNOT BE CORRECTED BY ADJUSTMENT. IN ADDITION, AN X-RAY TUBE OF 12° OR LESS TARGET ANGLE WILL PRODUCE AN ASYMMETRICALLY SHAPED FIELD WHEN A LARGE FIELD SIZE IS USED AT SHORT SID, BECAUSE OF ANODE CUT-OFF EFFECT. THIS IS NORMAL AND MAY NOT BE CORRECTED BY ADJUSTMENT.

LIGHT FIELD TO X-RAY FIELD ALIGNMENT

Misalignment of the light field/ X-ray field in either the X (cross table) or Y (long table) direction must not exceed 2% of the SID. In this case, it would be less than 20 mm (0.80"). If the test film shows that the light field (shadows of the markers) matches the X-ray field (shadow of the collimator shutters) to within the diameter of one marker and, if the diameter is less than 20 mm (1.80"), then alignment complies with the regulations.

Greater precision than this is possible. Recommended maximum deviation is one fourth. It is important the greatest degree of congruency possible is achieved.

If misalignment is detected in both X and Y directions, check the spacing from the focal spot to the collimator mounting surface is 80 mm (3.15") +/- 1 mm. If spacing needs to be adjusted, repeat the test film exposure after the adjustment.

If the collimator mount spacing is correct, but adjustment is still necessary proceed as follows:
- Place the test film on the face of the cassette over the white paper.
- Place the cassette in the position originally marked.
- Check the correct position of the film by the shadows cast by the markers.
- Using the images of the collimator shutters as the references for the shape and size of the X-ray field, adjust the light field to match.
- If adjustment is necessary, adjust the travel of the light source. All procedures can be found in **LIGHT FIELD ADJUSTMENTS** in this chapter.

Vertical Alignment

- Remove the part of the cover necessary to access the screws, see Chapter - **COVER REMOVAL**.
- If adjustment is required loosen the two screws **C** holding the light support.
- If the light-field is smaller than the X-ray field, lower the light source by adjusting screw **D**.
- If the light-field is bigger than the X-ray field, raise the light source by adjusting screws **D**.
- Tighten the two screws **C**.

See ***Fig. Light Field Adjustment***

Longitudinal Alignment (Long)

DO NOT TOUCH THE DISSIPATER WITH YOUR HANDS; IT COULD BE HOT AND CAUSE SEVERE BURNS.

- Remove part of the cover, see Chapter - **COVER REMOVAL.**
- If the light-field needs to be moved laterally, loosen (not remove) the fixing screws **A.**
- Use screw **B** to adjust transversely.
- When calibration is terminated, lock the screws **A.**

See ***Fig. Light Field Adjustment***

Fig. Light Field Adjustment

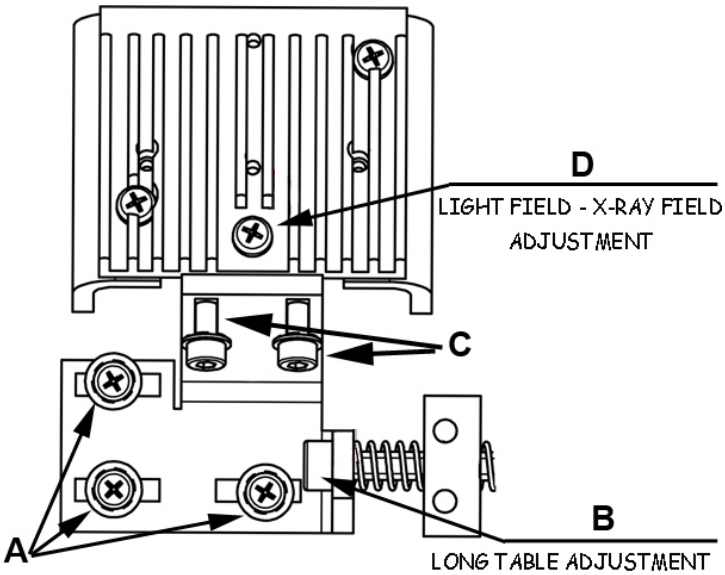

Transversal Calibration (CROSS)

If the light-field needs calibration, the mirror needs to be adjusted as follows:

- Remove the part of the cover necessary to access the screws, see Chapter - **COVER REMOVAL.**
- Loosen the mirror fixing screw **A** (not remove) and shift it to adjust the position of the mirror, see ***Fig. Transversal Calibration (CROSS).***
- Once you have regulated the mirror tighten the screw **A** and remount the cover, see Chapter - **COVER REMOVAL.**

Fig. Transversal Calibration (CROSS)

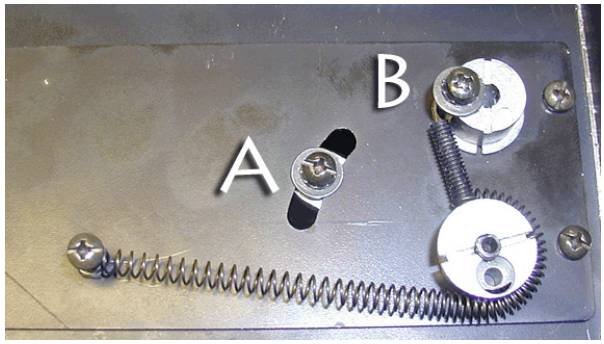

ELECTRONIC SYSTEM

This section describes the collimator control system which includes:

- **RSR008** - Electronic board which controls two motors for Cross/Long shutter movements and one motor for filter positioning.
- **GC-Led-5A** - Timer board for light source supply and operation. The board is CanBus controlled.

RSR008 BOARD

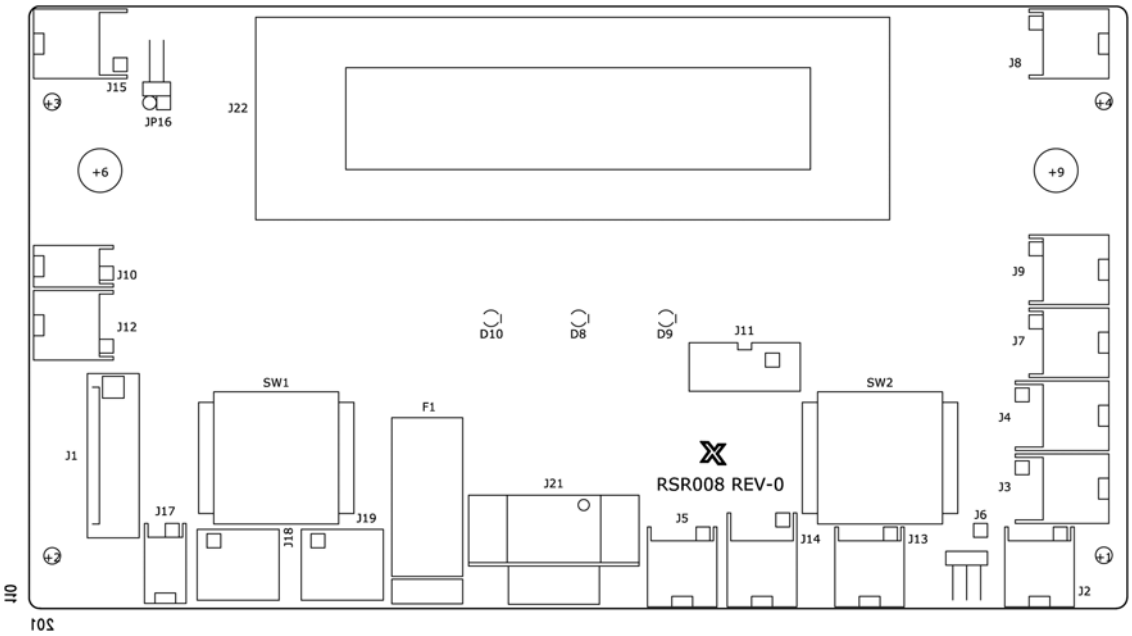

Characteristics

- CanBus Interface 500 Kbit/s 11 bit.
- White LED output.
- Ionization chamber output 24 V DC.
- Cooling fan output 24 V DC.
- Supply 24 V AC/DC.
- Temperature sensor input.
- Manual control input.
- Selection of fixed times (4 light times, 4 ramp times).
- Customizable board via serial interface (TTL).
- CanBus Connector.
- Hardware streamlining to improve measurement of mains frequencies.
- Compatible with 50/60 Hz frequencies with frequency detection.

J1 - Supply	1. 24 V AC/DC 2. Earth 3. Earth 4. 24 V AC/DC 5. Lamp 6. Lamp

J2 - Filter Photocell	1. +LED Emitter 2. In Photosensor Filter 3. -LED Emitter 4. Gnd Photosensor
J3 - Cross & Proximity Photocell	1. +LED Emitter Cross 2. n.u. (+LED) 3. In Photosensor Cross 4. In Proximity Signal 5. -LED Emitter 6. n.u. (Gnd) 7. Gnd Photosensor Cross 8. n.u. (Gnd)
J4 - Long Photocell	1. +LED Emitter Long 2. n.u. (+LED) 3. In Photosensor Long 4. n.u. (In sensor) 5. -LED Emitter 6. n.u. (Gnd) 7. Gnd Photosensor Long 8. n.u. (Gnd)
J5 - Filter and Lamp Switch	1. In Filter Switch 2. Gnd Filter Switch 3. In Lamp Switch 4. Gnd Filter Switch
J6 - Electronic Measuring Device	1. Gnd 2. +5 V 4. RX 6. TX
J7 - Cross Motor	1. OUTB- 2. OUTB+ 3. OUTA- 4. OUTA+
J8 - Filter Motor	1. OUTB- 2. OUTB+ 3. OUTA- 4. OUTA+
J9 - Long Motor	1. OUTB- 2. OUTB+ 3. OUTA- 4. OUTA+
J10 - Camera Supply	1. +12 V DC 2. Gnd

J11 - Programming Connector	1. +5 V DC 2. Busy 3. SCLK 4. RXD 5. CE 6. EPM 7. Gnd 8. Reset 9. CNVSS 10. TXD
J12 - Cross Potentiometer	1. +5 V DC (white) 2. Cursor (red) 3. Gnd (blue) 4. Gnd
J13 - Proximity Supply & Key Input	1. +24 V DC Proximity 2. Gnd Proximity 3. Key Input 4. Gnd Key
J14 - Long Potentiometer	1. +5 V DC (white) 2. Gnd (blue) 3. n.u. Laser Out +5 V 4. Gnd 5. Cursor (red) 6. Gnd 7. Out Fan +24 V 8. Gnd
J15 - CanBus Connector	1. +5 V DC 2. +5 V DC 3. CANL 4. CANL 5. CANH 6. CANH 7. Gnd 8. Gnd
J17 - External CanBus Supply	1. +8/30 V DC Can 2. Gnd Can
J18,J19 - RJ45 Connectors for DAP	1. CANH 2. CANL 3. Gnd 4. Dip-Switch 1 5. Dip-Switch 2 6. Dip-Switch 3 7. Dip-Switch 4 8. +24 V DC

Jumper	JP16 - CanBus termination OFF: CanBus not terminated ON: CanBus terminated with resistor 120 Ohm

GC-LED-5A

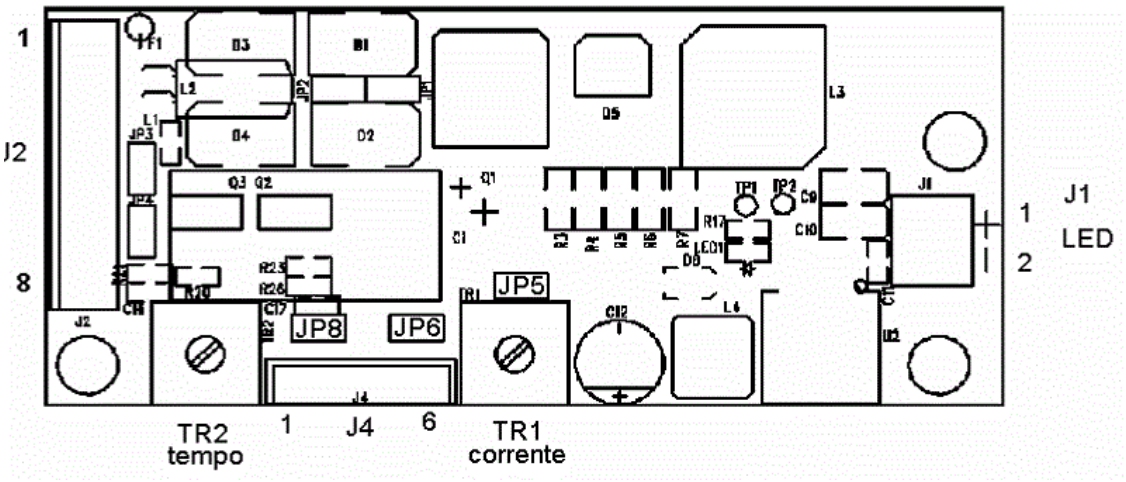

CONNECTORS

J2 - SUPPLY AND OUTPUTS	1. 20-30 V AC or 12-45 V DC 2. 20-30 V AC or 0 V DC 3. +5 V Fan 4. GND Fan 5. +5 V Laser 6. GND Laser 7. + Power-up external push-button 8. GND Power-up external push-button
J1 - LED OUTPUT	+ LED 5 A positive output - GND Led 5A
J3 - PROGRAMMING CONNECTORS	1. Vpp 2. +5 V 3. GND 4. PGD 5. PGC 6. NC
J4 - HOME SENSOR INPUT + EXTERNAL LED	1. + External LED 2. - External LED 3. - Photosensor LED Cathode 4. + Photosensor LED Anode 5. Input signal (Photosensor output collector) 6. GND (Photosensor output emitter)

Jumpers	OFF: without jumper ON: with jumper
JP1, JP2 - Alternate/Direct Power Supply	OFF: alternate power supply ON: direct power supply (pay attention to polarity)
JP3 - Fan Power Supply	OFF: fan is operated by micro controller according to settings made with LED ON: fan is always supplied
JP4 - Laser Power Supply	OFF: Laser is micro controller operated ON: Laser is always supplied
JP5 - Configuration of Push-button number output	OFF: LED and laser are controlled by only push button (on J2) ON: LED is controlled by standard push button (on J2), laser is controlled independently by push button on JP6.
JP6 - Button Input for Laser On time.	1. Laser ON button pin 1 2. Laser OFF button pin 2
JP8 - Configuration of LED ON time	Laser is controlled independently by the timer, this configuration is applicable in the same manner for both push buttons. **OFF**: output status is changed by pressing button (if the light is OFF will be ON and vice versa). **ON**: the timer operates in the time renew mode. When the button is pressed the time is renewed without the LED OFF (if the LED is ON it will stay ON but with the time reset). The same is applicable for the laser if is independent.
FAN	The fan switches ON together with the LED, and operates 15 seconds longer after the LED OFF.
Important	
JP7 - Programming of Microcontroller PIC16F52	OFF - Pic16F526 may be programmed by removing JP8 (thermistor input) from Pic ON - JP8 connected to Pic prevents reprogramming
Trimmers	
TR1- Current Control	Adjust the output current intensity to the LED. Step-less current adjustment from 0 to 5.1 A. Adjusting current to approximately 4.7 A will increase LED life without a significant loss of luminosity.

TR2 - TIME ADJUSTMENT	Adjusts the time from 30s to 120s up to 90% of run, maximum light ON time is 15 min. for safety reasons. When the timer is regulated at over 120s (i.e. 100% of its adjustment), the timer performs as power supply: it starts by powering-up the LED and other features such as laser and fan. In this case, maximum light ON time is 15 min. for safety reasons.

SYSTEM START-UP

On system power-up, board RSR008 software performs a series of internal self-tests aimed at self-assessment. Depending on the position of the key at the back of the collimator, the automatic or manual control phase will initiate on receipt of CanBus controls.

The display will then read the following information:

```
R225 ACS Collimator
Serial Number 12345
```

Where 12345 stands for the serial number (see programming of serial number)

In the normal mode, HW and SW versions of the board RSR008 will be displayed:

```
RSR008
Hw 0.00   Sw 0.00
```

The display will then provide current collimator functional parameters:

```
CROSS 0 LONG 0
SID  0
```

Current filtering level will be shown if a four-position radiological filter (0 Al) is in place:

```
CROSS 0 LONG 0
SID  0 0AL
```

	THE SYSTEM MAY BE PROGRAMMED TO DISPLAY THE KEY STATUS. IN THIS CASE, THE SECOND LINE WILL DISPLAY A "CLOSED PADLOCK" IF THE KEY IS IN THE "AUTOMATIC" MODE AND AN "OPEN PADLOCK" IF THE KEY IS IN THE MANUAL MODE.

If the operator wishes to configure the system to different requirements, the "configuration" mode must be initiated by switching the system OFF and then ON again. The "filter" push-button must be kept pressed while turning the system ON.

Current CanBus communication speed is displayed; this value may be changed.

```
BOARD CONFIGURATION
Can Speed 500 kBits/s
```

followed by:

```
Wait Command.....
```

The operator may send the CanBus strings to perform collimator configuration. Configuration parameters and relative strings are described in the following paragraph.

DESCRIPTION OF CONFIGURATION CONTROLS

Can ID	DLC	D0	D1	D2	D3	D4	D5	D6	D7	Aim
0x600	8	0x00								Displays RS232 COMM
0x600	8	0x01	N	N	N	N	N			Programs the collimator serial number at nnnnn (default 00000)

0x600	8	0x02	0x01							Italian language
			0x02							English language (default)

0x600	8	0x03	0x01							Measuring units: centimeters (default)
			0x02							Measuring units: inches

0x600	8	0x04	0x00							SID measure not displayed
			0x01							SID measure displayed (default)

0x600	8	0x05	0x00							Filter absent (default)
			0x01							Filter present

0x600	8	0x06	0x01							Filter 1mm AL
			0x02							Filter 2 mm AL (default)
			0x03							Filter 0.3 mm Cu

0x600	8	0x07	0x00							Automatic light disabled (default)
			0x01							Automatic light enabled

0x600	8	0x08	0x00							Inclinometer absent (default)
			0x01							Inclinometer present

0x600	8	0x09	0x00							Square field limits excluded (default)
			0x01							Square field limits enabled

0x600	8	0x0A	0x01							Can left lateral SID (default)
			0x02							Discreet left lateral SID
			0x03							Potentiometer left lateral SID

0x600	8	0x0B	0x00							Left lateral receptor absent
			0x01							Left lateral receptor Can (default)
			0x02							Left lateral receptor Bucky

0x600	8	0x0C	0x00							Right lateral receptor absent
			0x01							Right lateral receptor Can (default)
			0x02							Right lateral receptor Bucky

0x600	8	0x0D	0x01							Can vertical SID (default)
			0x02							Fixed vertical SID
			0x03							Single vertical SID
			0x04							Differential vertical SID

0x600	8	0x0E	0x00							Vertical receptor absent
			0x01							Can vertical receptor (default)
			0x02							ATS vertical receptor
			0x03							Bucky vertical receptor

0x600	8	0x0F	LSB	MSB						Fixed SID value: from 50 to 300 cm (default 100) ATTENTION TO: LSB AND MSB

0x600	8	0x10	LSB	MSB						Max. SID value: from 50 to 300 cm (default 180) ATTENTION TO: LSB AND MSB

0x600	8	0x11	LSB	MSB						Min. SID value: from 50 to 300 cm (default 80) ATTENTION TO: LSB AND MSB

0x600	8	0x12	n							DFT value: from 0 to 15 cm (default 0)

0x600	8	0x13	n							Inclinometer alarm value: from 0 to 15 degrees (default 3)

0x600	8	0x14	0x00							Filter return at 0 disabled
			0x01							Filter return at 0 enabled (default)

0x600	8	0x15	0x00							Key status display disabled
			0x01							Key status display enabled (default)

0x600	8	0x16	0x00							Angle reading disabled (default)
			0x01							Angle reading enabled

0x600	8	0x17	0x00							Square field return at 0, disabled (default)
			0x01							Square field return at 0, enabled

0x600	8	0x18	0x01							Calibration Off Inclinometer set (calibration 0°)

0x600	8	0x19	n							Step programming of Cross regulation in manual mode: from 1 to 20 mm (default 10)

0x600	8	0x1A	n							Step programming of Long regulation in manual mode: from 1 to 20 mm (default 10)

0x600	8	0x1B	n							Correction for Cross: - SID in cm - Format in %, it depends on 0x42 setting. If SID is in cm: -25cm, +25cm(default 0) If format is in % -10.0%, +10.0% (default 0) eg.:40=4,0%, -15= -1,5%

0x600	8	0x1C	n							Correction for Long: - SID in cm - Format in %, it depends on 0x42 setting. If SID is in cm: -25cm, +25cm(default 0) If format is in % -10.0%, +10.0% (default 0) eg.:40=4,0%, -15= -1,5%

0x600	8	0x1D	0X01							Standard Display (default)
			0X02							Sedecal display
			0x03							Display open

0x600	8	0x1E	MSB	LSB						Setting of max. Cross opening in mm (default 430 mm)

0x600	8	0x1F	MSB	LSB						Setting of max. Long opening in mm (default 430 mm)

0x600	8	0x20	N							Encoders sensibility setting in ms (0-250, default 25 ms)

0x600	8	0x21	N							Encoders inversion setting in ms (0-250, default 100 ms)

0x600	8	0x22	0x00							Cross and Long in a normal position (default)
			0x01							Cross and Long replaced

0x600	8	0x23	0x01							Standard Can protocol (default)
			0x02							Sedecal Can protocol
			0x03							GMM Can protocol

0x600	8	0x24	0x01							CanBus 1 MBit/s speed
			0x02							CanBus 500 kBit/s speed (default)
			0x03							CanBus 250 kBit/s speed
			0x04							CanBus 125 kBit/s speed
			0x05							CanBus 100 kBit/s speed
			0x06							CanBus 50 kBit/s speed
			0x07							CanBus 20 kBit/s speed
			0x08							CanBus 10 kBit/s speed

0x600	8	0x28	MSB	LSB						Sets steps to Filter position (1....12000) default 4262

0x600	8	0x29	0x01							Analog input used for the photosensor (default)
			0x02							Analog input is available

0x600	8	0x2A	MSB	LSB						Set control addresses (default 7A0): possible values 000...7F0

0x600	8	0x2B	MSB	LSB						Set Max frequency for shutters in FAST Mode (AUTO control) default=1500, Fast=6000)

0x600	8	0x2C	MSB	LSB	MSB	LSB	MSB	LSB		CROSS ref. steps. MaxSteps, RefSize, RefSteps (default 7050, 495, 7050)
0x600	8	0x2D	MSB	LSB	MSB	LSB	MSB	LSB		LONG ref. steps. MaxSteps, RefSize, RefSteps (default 5540, 495, 5540)

0x600	8	0x2E	MSB	LSB						Address setting Rotation board (default 0x740)

0x600	8	0x2F	0x01							Filter type at 1 hole
			0x02							Filter type at 5 holes (default)

0x600	8	0x30	0x00							Hardware without Pot on shutters (default)
			0x01							Hardware with Pot on shutters

0x600	8	0x31	0x01							Potentiometer position setting at shutters completely open

0x600	8	0x32	0x01							Potentiometer position setting at shutters closed

0x600	8	0x33	0x00							Alarm disabled in msg 0x100
			0x01							Alarm enabled in msg 0x100 (default)

0x600	8	0x34	0x00							Collimator rotation disabled (default)
			0x01							Collimator rotation enabled

0x600	8	0x35	0x00							Iris disabled (default)
			0x01							Iris enabled
0x600	8	0x36	MSB	LSB						Setting of Iris board address (default 0x750)

0x600	8	0x37	0x00							Old Photosensor PNP
			0x01							New Photosensor NPN (default)

0x600	8	0x38	0x01	n						Number of digital fixed formats (default=0, Max=5)
			0x02	n.F.	Cross	Long				n.F. = Number of formats (1-5) Cross, Long = Format cm (max.43)
			0x03	n.F.	Cross	Long				n.F. = Number of formats (1-5) Cross, Long = Format inches (max.17)
			0x04	n						Number of Iris fixed formats (default=0, max=5)
			0x05	n.F.	Iris					n.F=format number (1-5) Iris=Format in cm (max. 43)
			0x06	n.F.	Iris					n.F=format number (1-5) Iris=Format in inches (max. 17)

0x600	8	0x39	F1	F2	F3	F4				Filter Sequence (F1-4 may have a value from 0 to 3);default 0,1,2,3 0=0 Al 1=2 Al or 1 Al 2=1 Al 2 Cu 3=1 Al 1 Cu

0x600	8	0x3A	Buff							0=name on LCD follows protocol (default) 1=name may be altered via the following control

0x600	8	0X3B	CH1	CH2	CH3	CH4	CH5	CH6	CH 7	Company Name; 7 characters (in ASCII)

0x600	8	0x3C	MSB	LSB						Motor frequency set for shutter movement with manual bits default=1500, min=500, max=6000)

0x600	8	0x3D	0x00							Disable Iris Control. If disabled, iris is at maximum aperture
			0x01							Iris Control Enable (iris must be configured - default)

0x600	8	0x3E	n							Shutter -to-iris offset in mm when round field operational.(default=8, min=0, max=20)

0x600	8	0x3F	0x00							Ultrasonic rage finder disabled
			0x01							Ultrasonic range finder enabled

0x600	8	0x40	MSB	LSB						Ultrasonic range finder offset (in mm). Default = 270 mm

0x600	8	0X41	0x01							Old filter motor (round default)
			0x02							New filter motor (square)

0x600	8	0x42	0x01							Correction type in cm on SID
			0x02							Correction type in % on format (default) Attention: A change of correction type will delete correction data

0x600	8	0x43	FmaxH	FmaxL	Speed Limit	Speed up				Parameters of knob movement: Fmax: indicates max. speed sent to motor (default 7000). Speed limit: When the knob rotates, according to the set speed rotation, the motor speed corresponds to Rmax (default 4). Speed up: increases accuracy of movement according to rotation speed (default: 3)

0x600	8	0x44	0x01							Manual movement type: constant speed (default)
			0x02							Manual movement type: Speed in mm/sec

0x600	8	0x45	MSB	LSB						Manual movement in mm/sec (default) default = 100 mm/sec min. = 10 mm/sec max. = 500 mm/sec

0x600	8	0x46	0x01							SID input, SINGLE potentiometer, STAND (default)
			0x02							TABLE potentiometer input

0x600	8	0x47	0x01							Can, right lateral SID (default)
			0x02							Discreet, right lateral, SID
			0x03							Potentiometer, right lateral, SID

0x600	8	0x64	0x00							Undo modifications
			0x01							Save changes

0x600	8	0xFE	0x55							Collimator reset

For each control sent to the collimator, the operator will receive a feedback from the display to check the correctness of the configuration.

A Warning will be displayed in the event of an error message.

.

	TO SET THE MAXIMUM CROSS AND LONG OPENING, SEND THE VALUE IN MM EXPRESSED IN A 16 BIT NUMBER, EG: 430 MM CORRESPOND TO: 0x01 0xAE 250 MM CORRESPOND TO: 0x00 0xFA

UPDATING OF FIRMWARE

	FIRMWARE VERSIONS ARE UPDATED WITH LOADER.EXE PROGRAM SUPPLIED BY RALCO SRL.

Software controls a serial connection between PC and R225 collimator in order to download an update without using E8 Renesas programmer.

The program must be kept together with two other files in the same folder:
- LOADER.EXE program.
- SERIALE.TXT file for configuration.
- Updating file R225_xxx, where xxx is the firmware version number.

The xxx.COD file must be alone in the folder because LOADER.EXE draws from it automatically.

SERIALE.TXT file has two settings:
- COM = n where "n" is Port number on PC (from 1 to 6).
- BAUD_RATE = 115200 do not change.

To update the collimator is necessary to perform the following steps:
- Shut down the collimator.
- Remove the front panel.
- Connect the serial cable to J21 connector, DB9 pins on the RSR008 board.
- Start LOADER.EXE. The program remains on standby.
- Turn the collimator ON. The firmware update starts almost immediately. The percentage of data sent is displayed.
- After the download finishes the collimator restarts with the new version.

CONFIGURATION VIA SERIAL INTERFACE

Configuration of the collimator via serial interface is performed in Ralco with updated software; the customer will be required to load the software as described in the preceding paragraph.

POTENTIOMETER POSITIONING ALARMS

The alarm may be enabled in message 0x100 (0x7 D0) through 0x600 entering control 0x33 in the configuration phase.

This message includes the control bytes for potentiometer positioning alarms.

When the collimator activates a movement alarm, the system will read the collimator alarm state through message 0x100 and the number of alarms activated from start-up.

The red LED, Exposure Hold, on the collimator front panel flashes to indicate an alarm state.

Alarm State Reset

Turn the collimator key from automatic to manual. This will reset the shutters and Iris if assembled.

CANBUS MESSAGES

BOARD RSR008

DESCRIPTION

This collimator features an open communication CanBus connected to board RSR008.

CanBus messages used by the collimator are described in this Chapter; the addresses not taken by the following messages may be used by other communications nodes without interfering with normal collimator operation.

	COLLIMATOR CANBUS COMMUNICATION SPEED IS SET AT 500 KBIT/S

QUICK START

SID, Cross, Long Values

SID, Cross and Long values are set by sending message **7A0** via CanBus.
Regulate:

- SID at 100 cm
- Cross at 430 mm
- Long at 130 mm

A message of the following type must be sent via CanBus:

ID	DLC	D0	D1	D2	D3	D4	D5	D6	D7
7A0	8	40	00	00	64	01	AE	00	82
	length	automatic mode		SID values set at 100 cm		Cross value set at 430 mm		Long value set at 130 mm	

Setting of Automatic/Manual Mode

To set the collimator operating mode, message 7AO must be sent via CanBus. A Cross/Long/ SID value must be entered:

- SID at 100 cm
- Cross at 430 mm
- Long at 130 mm

A message of the following type must be sent via CanBus to enable the automatic mode:

ID	DLC	D0	D1	D2	D3	D4	D5	D6	D7
7A0	8	40	00	00	64	01	AE	00	82
	length	automatic mode		SID values set at 100 cm		Cross value set at 430 mm		Long value set at 130 mm	

A message of the following type must be sent via CanBus to enable the manual mode:

ID	DLC	D0	D1	D2	D3	D4	D5	D6	D7
7A0	8	80	00	00	64	01	AE	00	82
	length	manual mode		SID values set at 100 cm		Cross value set at 430 mm		Long value set at 130 mm	

Status Messages

The status messages feature must be activated to received collimator status data. To do this, set the time value in milliseconds of the message return frequency.

Status messages are activated with two messages:

- 7A7 - enables message transmission; 7F0 (SID, Cross, Long status and position); 7F1 (Filter and Flag)

To enable status messages 7F0 and 7F1 with a frequency of 100 ms.

ID	DLC	D0	D1	D2	D3	D4	D5	D6	D7
7A7	8	00	64	00	00	00	00	00	00
	length	Time in milliseconds							

Cross/Long

Once a movement message is sent, the status messages provide data related to collimator movement, current position and possible movement errors.

Status message 7F0 give the current Cross/Long value.

ID	D0	D1	D2	D3	D4	D5	D6	D7
7F0	FLAGS	xx	yy	zz	CrossH	CrossL	LongH	LongL
					Byte Cross position		Byte Long position	

Cross = (CrossH<<8) + CrossL

Long = (LongH<<8) + LongL

When the device is moving, bit0 (with a value of D0) is set at 1. To detect errors during movement, the D1 value of status message 7F9 must be analysed.

Messages are detailed with specific descriptions in this Chapter.

CONTROL MESSAGES

"Control" messages are sent to RSR008 by the external board ASR003 and may be used by the outside control system via CanBus when ASR003 board is lacking.

0x7A0

This is a particular message, in fact it may takes on two different meanings, DLC equal to 8 or 2.

ID	TYPE	DLC	D0	D1	D2	D3	D4	D5	D6	D7
0x7A0	**Input for RSR008**	8								
0x7A0	**Input for RSR008**	2								

DLC=8

D0

b7	If 1: Collimator manual control (applicable to R225 ACS and R225/006/ACS protocol)
b6	If 1: Collimator automatic control (applicable to R225/006/ACS protocol)
b5	If 1: Cross closed
b4	If 1: Cross open
b3	If 1: Long closed
b2	If 1: Long open
b1	if 1: Iris closed (if assembled)
b0	If 0: Iris open (if assembled)

D1	
b7	If 1: Disable temporarily the format limits (the value not Flash stored), applicable to R 225 ACS protocol If 1: Filter position 2 (if bit 5 used inserts filter position 3), applicable to R 225/006/ACS protocol
b6	Not used
b5	If 1: Filter position 1 (if bit 7 used inserts filter position 3)
b4	If 0: In square field moves Iris to maximum aperture (62cm) If 1: In square field moves Iris to indicated aperture by 7A3 sub-control. 0x0A
b3	If 1: Ignores formats (SID and dimensions)
b2	If 0: Radiology (square-field) If 1: Fluoroscopy (round-field, if assembled)
b1	If 1: Filter change applicable to R 225 ACS and R 225/170/ACS protocol)
b0	R 225 ACS: 1: Inverts the light status 0: Light status unchanged R 225/170/ACS: 1: Light ON 0: Light status unchenged GMM: 1: Light ON 0: Light OFF

D2 ...D7

Are not bit defined but byte defined

0x7A0	
D2	bit 7: not used bit 6: MSbit for SID > 255 bit 5: bit1 not used
D3	Vertical SID in cm

D4	MSB vertical Cross format in mm or Iris if in Fluoroscopy
D5	LSB vertical Cross format in mm or Iris if in Fluoroscopy
D6	MSB vertical Long format in mm
D7	MSB vertical Long format in mm

DLC=2

The message is used to send values of Cross and Long inclination.

0x7A0	
D0	Cross inclination (0-70°)
D1	Long inclination (0-70°)

0x7A1

This message serves to send the data related to lateral left and right formats externally from the collimator to board RSR008.

ID	Type	DLC	D0	D1	D2	D3	D4	D5	D6	D7
0x7A1	**Input for RSR008/C**	8								

0x7A1	
D0	MSB left Cross format in mm
D1	LSB left Cross format in mm
D2	MSB left Long format in mm
D3	LSB left Long format in mm
D4	MSB right Cross format in mm
D5	LSB right Cross format in mm
D6	MSB right Long format in mm
D7	LSB right Long format in mm

0x7A2

This message serves to send the data related to lateral SID externally from the collimator to board RSR008.

ID	Type	DLC	D0	D1	D2	D3	D4	D5	D6	D7
0x7A2	**Input for RSR008**	8								

0x7A2	
D0	MSB lateral SID in mm
D1	MSB lateral SID in mm
D2..D7	Not used

0x7A3

This message allows different operations to be performed

ID	Type	DLC	D0	D1	D2	D3	D4	D5	D6	D7
0x7A3	**Input for RSR008**	8								

Byte D0 may assume the following values:

- 01h: Filter change, in this case byte D1 transmits filter position information (00h...03h)
- 02h: Requires the serial number to be transmitted via CanBus (see 0x7F2 message)
- 03h: Shows a request of change to lamp status: If Lamp is ON it will be switched OFF; If it is OFF it will be switched ON
- 04h: Shows a request to switch ON LED on RSR008 board
- 05h: Shows a request to switch OFF the LED on RSR008 board
- 06h: Modifies speed during automatic movement for format values:
  D1: MSB motor frequency (min. 500, max. 6000)
  D2: LSB motor frequency
- 07h: Modifies manual movement speed for shutters
  D1: MSB motor frequency (min. 500, max. 6000)
  D2: LSB motor frequency
- 08h: Light source ON/OFF control
  D1= 1 - ON
  D1= 0 - OFF
- 09h: Temporary exclusion of the inclinometer
  D1= 1 - Excludes inclinometer (collimator always considered as vertical)
  D1= 0 - Cut off inclinometer exclusion (if it has not been configured it will remain unconfigured)
- 0Ah: Maximum Iris Field
  D1, D2 = H,L - Maximum dimensions in mm
- 0Bh: Type of shutter movement with open/closed bit, msg 0x7A0
  D1= 1: Constant shutter movement (sub message 0x7A0)
  D1= 2: Shutter movement in mm/sec. Speed of projected movement is constant although SID changed.

- 0Ch: Shutter speed with open/closed bit, msg 0x7A0
  D1 = 0: STEPPER_CROSS - 1: STEPPER_LONG
  D2, D3 = H, L - speed in mm/sec (100 mm/sec default), min. = 10 mm/sec, max. = 500 mm/sec. Speed of projected movement is constant although SID changed.
- 0Dh: Enable/Disable Knobs on front panel
  D1 = 0: Knobs disabled
  D1 = 1: Knobs enabled
- 0Eh: Enable/Disable Filter push button on front panel
  D1 = 0: Push button disabled
  D1 = 1: Push button enabled
- 0Fh: Enable/Disable Light push button on front panel
  D1 = 0: Push button disabled
  D1 = 1: Push button enabled
- FEh: COLLIMATOR RESET. D1=0x55 - Material reset of collimator (complete restart)

0x7A4

This message is applicable only for R225/170/ACS CAN protocol. The message is used to send automatic/manual control to RSR008 board

ID	Type	DLC	D0	D1	D2	D3	D4	D5	D6	D7
0x7A4	**Input for RSR008**	8								

0x7A4	
D0	Bit defined
b7	If 1: collimator request of manual control
b6	If 1: collimator request of automatic control
b5..b0	bit non utilizzati
D1...D7	Byte non utilizzati

0x7A5

Message used to send SID value to the collimator, without changing the square field size.

ID	Type	DLC	D0	D1	D2	D3	D4	D5	D6	D7
0x7A5	**Input for RSR008**	8	LSB	MSB						

D0, D1 (LSB, MSB): Shows the present SID value in cm. The value must be between the min. and max. values selected in the collimator configuration phase.

0x7A6

This message serves to know the hardware/software version of board RSR008.

ID	Type	DLC	D0	D1	D2	D3	D4	D5	D6	D7
0x7A6	**Remote**	8								

Board RSR008/C responds with string

"R225S200"

Which stands for:

Collimator 225 firmware 2.00

0x7A7

This message serves to program the transmission time of “Status” type messages with address 0x7F0, 0x7F1, 0x7F9 and 0x7FC by board RSR008 board.

ID	Type	DLC	D0	D1	D2	D3	D4	D5	D6	D7
0x7A7	**Input for RSR008**	8								

0x7A7	
D0	MSB transmission time 0x7F0 messages in msec (default = 0)
D1	LSB transmission time 0x7F0 messages in msec
D2	MSB transmission time 0x7F1 messages in msec (default = 0)
D3	LSB transmission time 0x7F1 messages in msec
D4	MSB transmission time 0x7F9 messages in msec (default = 0)
D5	LSB transmission time 0x7F9 messages in msec
D6	MSB transmission time 0x7FC messages in msec(default = 0)
D7	LSB transmission time 0x7FC messages in msec

If the set time is less than 100 msec, the messages will be sent once only. If the value is the same or greater, the messages will be repeated at a value equal to the set time value.

0x7A8

The message is used to send to control the maximum Cross and Long openings.

ID	Type	DLC	D0	D1	D2	D3	D4	D5	D6	D7
0x7A8	**Input for RSR008**	8								

0x7A8	
D0..D1	Set value in mm, maximum Cross opening (MSB, LSB) (default = 430)
D2..D3	Set value in mm, maximum Long opening (MSB, LSB) (default = 430)
D4..D5	Set value in mm, minimum Cross opening (MSB, LSB) (default = 0)
D6..D7	Set value in mm, minimum Cros opening (MSB, LSB)(default = 0)

These values indicate maximum available opening of the square felid.

The message does not modify values stored in Flash memory during a configuration phase; the values are lost on the collimator power down and must be re-sent at subsequent power-up.

0x7A9

This message allows to program light source ON.

ID	Type	DLC	D0	D1	D2	D3	D4	D5	D6	D7
0x7A9	**Input for RSR008**	8								

0x7A9	
D0	Lamp Timer setting in seconds (5 to 60 seconds)(default = 30)
D1..D7	Not used

0x7AA

This message is used by the external board ASR003 to send, to board RSR008,status messages related to digital inputs present on the external board.

0x7AA	
D0	Not used
D1	Bit defined
	b0-b6: Not used
	b7: Presence of lateral left cassette
D2	Bit defined
	b0: Presence of full size lateral left
	b1: Right lateral cassette
	b2: Full size lateral right
	b3: Open Long
	b4: Close Long
	b5: Open Cross
	b6: Close Cross
	b7: Open Iris

D3	Bit defined
	b0: Close iris
	b1: Filter position 1
	b2: Not used
	b3: SID lateral position 1
	b4: Filter position 2
	b5: Filter position 3
	b6:SID lateral position 5
	b7: SID lateral position 4
D4	Bit defined
	b0: Not used
	b1: SID lateral position 2
	b2: SID lateral position 3
	b3: SID lateral full size 1
	b4: SID lateral full size 2
	b5: Not used
	b6: Temporary exclusion inclinometer
	b7: Not used
D5	Bit defined
	b0: Not used
	b1: Not used
	b2: Not used
	b3: Filter position 4
	b4: ON/OFF light source switch
	b5- b7: Not used
D6	Bit defined
	b0 - b3: Not used
	b4: Calibration request
	b5 - b7: Not used
D7	Bit defined
	b0 - b2: Not used
	b3: Tomography
	b4: Request Manual mode
	b5-b6: Not used
	b7: Table cassette in

0x7AB

This message is used by the external board ASR003 to send, to board RSR008, the voltage value of potentiometer measurement related to SID and vertical cassettes.

ID	Type	DLC	D0	D1	D2	D3	D4	D5	D6	D7
0x7AB	**Input for RSR008**	8								

0x7AB	
D0	MSB voltage value of stand potentiometer
D1	LSB voltage value of stand potentiometer
D2	MSB voltage value of table potentiometer
D3	LSB voltage value of table potentiometer
D4	MSB voltage value of table bucky Cross potentiometer
D5	LSB voltage value of table bucky Cross potentiometer
D6	MSB voltage value of table bucky Long potentiometer
D7	LSB voltage value of table bucky Long potentiometer

0x7AC

Message is used by the external board ASR003 to send, to board RSR008, the voltage value of potentiometer measurement related to lateral left and right cassettes.

ID	Type	DLC	D0	D1	D2	D3	D4	D5	D6	D7
0x7AC	**Input for RSR008**	8								

0x7AC	
D0	MSB voltage value of the left bucky Cross potentiometer
D1	LSB voltage value of the left bucky Cross potentiometer
D2	MSB voltage value of the left bucky Long potentiometer
D3	LSB voltage value of the left bucky Long potentiometer
D4	MSB voltage value of the right bucky cross potentiometer
D5	LSB voltage value of the right bucky cross potentiometer
D6	MSB voltage value of the right bucky Long potentiometer
D7	LSB voltage value of the right bucky Long potentiometer

0x7AD

Message to configure some operation variable without having to resort to configure.

ID	Type	DLC	D0	D1	D2	D3	D4	D5	D6	D7
0x7AD	**Input for RSR008**	8								

0x7AD	
D0	Bit defined b7: If 1, sub-control on D1 is used b6: Not used b5: If 1 indicates Long side SID correction (value in byte D3) b4: If 1 indicates Cross side SID correction (value in byte D2) b3: If 1 sets inches as unit of measurement b2: If 1 indicates cm as unit of measurement b1: If 1 indicates the use of Italian b0: If 1 indicates the use of English
D1	Sub-control if D0b7 = 1
D2	Correction for Cross: If SID is set in cm: correction from -25 to +25 cm If format is set in % Percentage correction for Cross: -10.0%, +10,0% eg.:40= 4,0%, -15%= -1.5%
D3	Correction for Long: If SID is set in cm: correction in cm from -25 to +25 cm If format is set in % Percentage correction for Long: -10.0%, +10,0% eg.:40= 4,0%, -15%= -1.5%
D4	Not used
D5	Not used
D6	Not used
D7	Not used

D1: 0x01 - Enable/Disable Iris
D2: 0x00=Disable Iris - 0x01 Enable Iris
D3: 0x00=Temporary - 0x01=Flahs stored

0x7AE

Message used to transmit information, related to the software version of the external board to RSR008 for display viewing.

0x7AF

Used exactly the same way as 0x600 in configuration. It serves to change different parameters during normal collimator operation.

Note:

Remember to save data sent through control 7Af 8 0x64 0x01.

After saving data, the collimator must be switched OFF and ON again or re-set through control 0x7Af 8 0xFE 0x55.

Status Messages

"**Status**" type messages are the messages generated by board RSR008 to relay information related to collimator status.

0x7F0
This message may be sent by board RSR008 after having programmed the transmission time.

R225/006/ACS protocol: The message is sent automatically every 1000 ms without having to enter the activation control (0x7A7).

ID	Type	DLC	D0	D1	D2	D3	D4	D5	D6	D7
0x7F0	**Output for RSR008**	8								

D0	
b7	Not used
b6	If 1: Light source is ON
b5	Not used
b4	Not used
b3	Not used
b2	Not used
b1	Not used
b0	If 1: Collimator is in the initial reset mode

D1	
b7	If 1: Photosensor is activated if 0: Photosensor is de-activated or disabled during configuration
b6	If 1: Collimator in the manual mode If 0: Collimator in the automatic mode or in the ExpHold
b5	Not used
b4	Not used
b3	Not used
b2	Not used
b1	Not used
b0	Not used

D2	
b7	If 1: The Long field motor is moving
b6	If 1: The Cross field motor is moving

b5	If 1: The Filter motor is moving
b4	If 1: Iris field motor is moving
b3	Not used
b2	Msbit for SID > 255
b1	Filter in position 2
b0	Filter in position 1

(perfiltroposizione3inseritoavremob1eb0attivia1)

The following data are byte programmed:

0x7F0	
D3	Vertical SID in cm
D4	MSB vertical Cross format in mm
D5	LSB vertical Cross format in mm
D6	MSB vertical Long format in mm
D7	LSB vertical Long format in mm

0x7F1

This message may be sent by board RSR008 after having programmed transmission time.

ID	Type	DLC	D0	D1	D2	D3	D4	D5	D6	D7
0x7F1	**Output for RSR008**	8								

0x7F1	
D0	Inclination (from -128 to +127)
D1	Not used
D2	Not used
D3	Present filter selection (0...3)
D4	SID lateral in cm
D5	Not used
D6	Not used
D7	Not used

0x7F2

Message sent by board RSR008.

It contains the serial number over 8 bytes and is generated with control 7A3.

ID	Type	DLC	D0	D1	D2	D3	D4	D5	D6	D7
0x7F2	**Input for RSR008**	8								

0x7F2	
D0	'S'
D1	'/'
D2	'N'
D3	First digit of serial number
D4	Second digit of serial number
D5	Third digit of serial number
D6	Fourth digit of serial number
D7	Fifth digit of serial number

0x7F3, 0x7F4, 0x7F5, 0x7F6, 0x7F7, 0x7F8

Messages that are not used.

0x7F9

Message that may be transmitted by board RSR008 after having programmed transmission time.

0x7F9

ID	Type	DLC	D0	D1	D2	D3	D4	D5	D6	D7
0x7F9	**Output for RSR008**	8								

D0	
b7	If 1: Indicates at least one shutter (Cross or Long) is completely closed
b6	Not used
b5	If 1: Indicates collimator is in the automatic or manual mode (red LED off)
b4	Not used
b3	Not used
b2	Not used
b1	Not used
b0	If 1: Light ON

D1	
b7	Not used
b6	Not used
b5	Not used
b4	Not used
b3	If 1: Indicates Key in automatic
b2	If 1: Indicates collimator in the automatic mode (green LED)
b1	If 1: Indicates collimator not operational (red LED)

b0	If 1: Indicates collimator manual operation (yellow LED)

D2	
b7	If 1: Unit of measurement inches (0=centimetres)
b6	Not used
b5	If 1: Language - English (0=Italian)
b4	If 1: Fixed Vertical SID selection
b3	If 1: Filter present
b2	If 1: Iris present
b1	If 1: Long present
b0	If 1: Cross present

D3	
b7	Not used
b6	Not used
b5	Not used
b4	Not used
b3	If 1: Lateral left Bucky
b2	If 1: Lateral right Bucky
b1	If 1: Vertical Bucky
b0	If 1: Differential vertical SID selection

D4	
b7	Not used
b6	If 1: SID display enabled
b5	If 1: Right lateral CAN SID selection
b4	If 1: Left Lateral CAN SID selection
b3	If 1: CAN or ATS left lateral receptor
b2	If 1: CAN or ATS right lateral receptor
b1	If 1: Vertical CAN or ATS receptor
b0	If 1: Vertical filtering selection 2 mm (0=1 mm)

D5	MSB Iris aperture (in mm)

D6	
b7	Not used

b6	Not used
b5	Not used
b4	Not used
b3	Not used
b2	If 1: Flash has been updated with a new configuration value
b1	If 1: Flash has been re-loaded with default values
b0	If 1: Error in data load from Flash

D7	LSB Iris aperture (in mm)

0x7FA, 0x7FB
These messages are not used

0x7FC
This message may be transmitted by board RSR008 after having programmed transmission time.

ID	Type	DLC	D0	D1	D2	D3	D4	D5	D6	D7
0x7FC	**Output RSR008**	8								

D0	
D0	MSB Cross present position indicated as the step number
D1	LSB Cross present position indicated as the step number
D2	MSB Long present position indicated as the step number
D3	LSB Long present position indicated as the step number
D4	MSB Filter present position indicated as the step number
D5	LSB Filter present position indicated as the step number
D6	Bit use according to the following meaning: b0: If 1 opto-Switch of Cross closed is in the blackout mode, if 0 illuminated b1: If 1 opto-Switch of Long closed is in the blackout mode, if 0 illuminated b2: If 1 opto-Switch of Filter is in the blackout mode, if 0 illuminated b3: If 1 opto-Switch of Cross open is in the blackout mode, if 0 illuminated b4: If 1 opto-Switch of Long open is in the blackout mode, if 0 illuminated b5, b6, b7: Not used
D7	Not used

0x7FD, 0x7FE, 0x7FF
These messages are not used

DISPLAY MESSAGES

0x7CO

This message allows to change the display during collimator operation: switching between R225/ACS, R225/170/ACS and free display modes with a single control.

The control is not stored in the microprocessor Flash; on system power-up the collimator loads the last value stored during configuration.

ID	Type	DLC	D0	D1	D2	D3	D4	D5	D6	D7
0x7CO	**INput for RSR008**	8								

DO	New display type: 0x01 R225/ACS, 0x02 R225/170/ACS, 0x03 available
D1 - D7	Not used

0x7C1

The message is available in the "free” or “available display" mode only. It allows to write data in a specific position on the display.

Display is composed of two lines of 20 characters each.

Character position is identified singly as follows:

0x00	0x01	0x02	0x03	0x04	0x05	0x06	0x07	0x08	0x09	0x0A	0x0B	0x0C	0x0D	0x0E	0x0F	0x10	0x11	0x12	0x13
0x20	0x21	0x22	0x23	0x24	0x25	0x26	0x27	0x28	0x29	0x2A	0x2B	0x2C	0x2D	0x2E	0x2F	0x30	0x31	0x32	0x33

Control 0x7C1 allows to write a string of 7 ASCII characters (max) starting from one of the positions described above.

If the string exceeds the selected line, the invalid part is ignored.

The ASCII characters available in the display map have hexadecimal codes between 0x20 and 0x7F.

The following codes are also available:
0x01: Padlock closed
0x02: Padlock open
0x03: Mark

Should the number of characters be fewer than 7, code 0 x 00 will be added at the end of the string.

With this message it is possible to delete one or both lines.

Message structure:

.

ID	Type	DLC	D0	D1	D2	D3	D4	D5	D6	D7
0x7C1	**Input RSR008**	8								

D0	Controls: 0x00...0x13: Writes from the mark specified in the first line 0x00...0x33: Writes from the mark specified in the second line 0xF1: Deletes the first line 0xF2: Deletes the second line 0xF3: Deletes both lines
D1 - D7	Characters to be entered (the value 0 indicates the string end)

Example:

			H	**e**	**l**	**l**	**o**		**W**	**o**	**r**	**l**	**d**	**!**					
	W	**e**	**l**	**c**	**o**	**m**	**e**		**t**	**o**		**R**	**a**	**l**	**c**	**o**	**!**		

The following sequence must be sent:

ID	DLC	D0	D1	D2	D3	D4	D5	D6	D7	Meaning
0x7C0	8	0x03								*Switch the collimator in the mode: "Open display"*
0x7C1	8	0xF3								*Delete the display*
0x7C1	8	0x03	0x48	0x65	0x6C	0x6C	0x6F	0x20	0x57	*Writes "**Hello W"** starting from the position 03 hex*
0x7C1	8	0x0A	0x6F	0x72	0x6C	0x64	0x21	0x00	0x00	*Writes "**orld**" starting from the position 0A hex*
0x7C1	8	0x21	0x57	0x65	0x6C	0x63	0x6F	0x6D	0x65	*Writes "**Welcome**" starting from the position 21 hex*
0x7C1	8	0x29	0x74	0x6F	0x20	0x52	0x61	0x6C	0x63	*Writes "**to Ralc**" starting from the position 29 hex*
0x7C1	8	0x30	0x6F	0x21	0x00	0x00	0x00	0x00	0x00	*Writes "**o!**" starting from the position 30 hex*

STATUS 0X100

This special message is sent by board RSR008 to any net node to transmit data related to collimator operation.

.

ID	Type	DLC	D0	D1	D2	D3	D4	D5	D6	D7
0x100	**Output RSR008**	2								

D0	
b7	If 1: Collimator is in initial reset phase
b6	Used internally for relay switch lateral SID
b5	Used internally for relay switch lateral SID
b4	If 1: Indicates "x-ray" relay output to be activated
b3	If 1: Indicates "closed shutters" relay output to be activated
b2	If 1: Indicates "manual" relay output to be activated
b1	If 1: Indicates "hold" relay output to be activated
b0	If 1: Indicates "ready" relay output to be activated

D1	
b7	Not used
b6	Not used

b5	Not used
b4	Not used
b3	Not used
b2	Not used
b1	Not used
b0	Not used

D2	
b7	If 1: Filter alarm (position not correct)
b6	If 1: Cross alarm (position not correct)
b5	If 1: Long alarm (position not correct)
b4	If 1: Iris alarm (position not correct)
b3	If 1: Cross or Long reset alarm
b2	Not used
b1-b0	Number of successive trials of filter positioning (0-3)

D3	Total filter alarms from start-up
D4	Total Cross alarms from start-up
D5	Total Long alarms from start-up
D6	Total Iris alarms from start-up
D7	Not used

In the event of R225/006/ACS the control is sent to 0x7D0 address, in other cases to 0x100 address.

COMPLIANCE VERIFICATION

MINIMUM FILTRATION REQUIREMENT

To indicate compliance with 21 CFR, sub-chapter J, part 1020 of Performance Standard it is necessary for the assembler to perform a series of tests.

Description of test methods are illustrated in this chapter but factors, such as experience, availability of equipment and tolerance on compliance are referred directly to the Safety Standards covering Electro-medical equipment.

> THE FOLLOWING PROCEDURES REQUIRE THAT X-RADIATION BE PRODUCED. TAKE ADEQUATE PRECAUTIONS THAT NO PART OF HUMAN BEING IS EXPOSED TO X-RADIATION, DIRECT OR INDIRECT.

The above HVL requirements can be met if it is demonstrated that the aluminium equivalent in the primary beam is not less than that shown in the following table:

Minimum Filtration Requirement - Beam Quality (HVL)		
Designed Operating Range (kVp)	**Measured Operating Potential (kVp)**	**Minimum HVL (mm. Of Al) X-ray System**
Below 50	30 40 50	0.3 0.4 0.5
From 51 a70	51 60 70	1.2 1.3 1.5
Above 71	71 80 90 100 110 120 130 140 150	2.1 2.3 2.5 2.7 3.0 3.2 3.5 3.8 4.1

The information contained in the above table was extracted from the Code of Federal Regulations FDA 21 1020.30 (m).

Type 100 Aluminium Alloy (as given in “ALUMINUM STANDARDS AND DATA” verification of compliance).

Visual Determination of Half-Value Layer (HVL)

The above HVL requirements can be met if it is demonstrated that the aluminium equivalent in the primary beam is not less than that shown in the following Total Filtration table:

Total Filtration Of Primary Beam In Aluminium Equivalence	
Operating Voltage (kVp)	**Total Filtration (mm Al Equivalent)**
Below 50	0.5
From 51 to 70	1.5
Over 70	2.2

The Aluminium equivalence of each component in the primary beam (X-ray tube and housing, beam limiting device and any additional filtration in the system) is specified on the component, in the technical data attached to the component or can be measured. Determine the total aluminium equivalence in the primary beam and make sure that it is equal or greater than those specified in the above **Table Total Filtration of Primary Beam in Aluminium Equivalence.**

Quick-Check of Minimum Filtration Requirement at a Particular kVp

If the total inherent filtration cannot be seen, then the HVL must be obtained with the following procedures:

The HVL in millimetres of aluminium in the system under test must be compared with those specified in **Table Minimum Filtration Requirement - Beam Quality (HVL)** and must be greater than or equal to the values shown in the table.

a) Direct the central X-ray beam perpendicular and in the center of a RAD-Check instrument. Determine the exact distance from the X-ray tube focal spot to the window of the collimator (273 mm - 10.75"). Place the input area of the RAD-CHECK at an equal distance from the collimator window. Collimate the beam to an area slightly larger than the detector.

b) Make an exposure at a pre-selected technique factor of 90 kVp and appropriate mA and time values with no added filtration in the beam; record the reading.
Using the type 1100 Aluminium Alloy, tape a total of 2.5 mm of Aluminium to the window of the collimator. Make an exposure using the same technique factors; record the reading.

c) Verify that the radiation read with the 2.5 mm Al in the beam is greater or equal to 50% of the radiation read with no filtration in the beam.

Standard Absorber Method

The HVL determination obtained from the following procedures are to be compared with those illustrated in the **Table - Minimum Filtration Requirement - Beam Quality (HVL).** The HVL in millimetres of aluminium obtained during the test must be greater or equal than the values listed in the above mentioned table.

a) Direct the central X-ray beam perpendicular and in the center of a RAD-Check instrument. Determine the exact distance from the X-ray tube focal spot to the window of the collimator (273 mm - 10.75"). Place the input area of the RAD-CHECK at an equal distance from the collimator window. Collimate the beam to an area slightly larger than the detector.

b) Select a tube potential of 100 kVp and appropriate mA and seconds, with no added filtration in the beam make an exposure and record the reading. Using a set of several sheets of 1100 Aluminium Alloy, each having a thickness of 0.5 or 1.0 mm, tape the filtration to the window of the collimator. Make an exposure for each increments of filtration and record the reading.

c) Plot the exposure readings (log scale) versus the total added filtration thickness on semi-log paper; see the sample hereunder.

d) Verify that HLV values in the useful beam for the above specific tube potential is not less than the values shown in **Table - Minimum Filtration Requirement - Beam Quality (HVL)**.

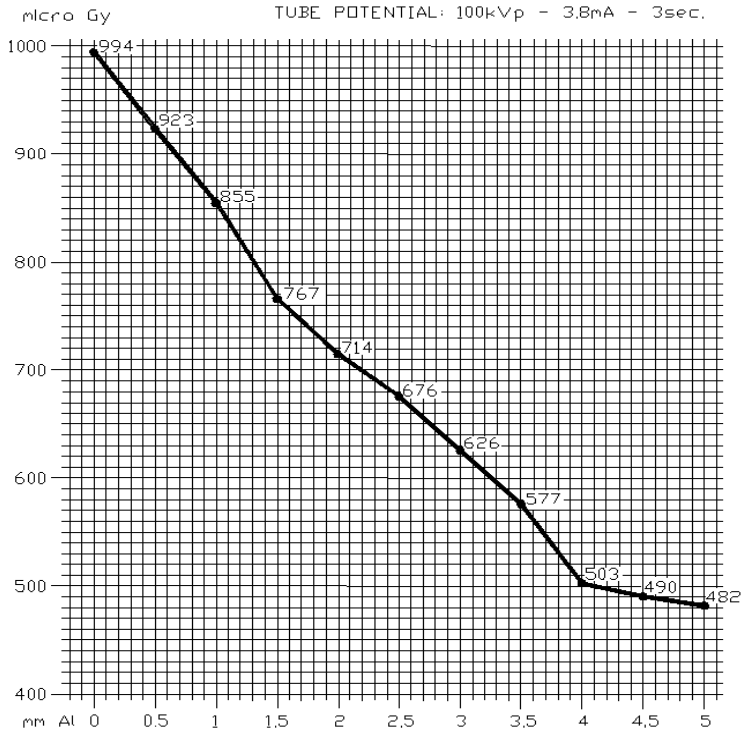

generale\12_verif_conf_graph.gif

VISUAL DEFINITION OF X-RAY VERSUS LIGHT FIELD

Chapter - **COLLIMATOR CALIBRATION** - paragraph - **Light-Field to X-ray Field Alignment**.

FIELD SIZE INDICATION

Chapter- **ADJUSTMENTS**, paragraph **Field Size Indication.**

CROSSHAIR ALIGNMENT

CHAPTER- ADJUSTMENTS, PARAGRAPH CROSSHAIR ALIGNMENT.

LIGHT FIELD ILLUMINATION INTENSITY

a) When a light field simulating the X-Ray field is used the illumination provided at 100 cm. cannot be less than: 160 lux [(21 CFR 1020.31 (d) (2) (ii)].

b) Place the Focus of the X-Ray tube at 100 cm. from the table top were the light field as been projected. Open the collimator's shutters to assure that each quadrant of the light field is larger than the measuring area of the photometer.

c) Check that the voltage specified by the manufacturer is applied to the lamp, make certain that all surfaces in the light beam are clean and unobstructed.

d) Place a photometer capable of reading up to 160 lux in the centre of each of the four quadrants of the light field.

e) Turn on the light beam and read the light intensity, subtract to it the ambient lighting, previously determined.

f) Verify that the average illumination is higher than 160 lux.

g) Verify that the contrast ratio is performed between two points:
- The first point at 3 mm outside the edge of the light field.
- The second point at 3 mm inside the edge of the light field.

These measurements are to be performed with the probe of the lux metre set at 1 mm aperture.

h) Record the measured values including all data regarding the instrument and voltage employed.

EMC COMPLIANCE

Electromagnetic Emissions

The R225 ACS/R225 ACS DHHS colimator is suitable for use in the specified electromagnetic environment. The purchaser or user of the R225 ACS/R225 ACS DHHS should assure that it is used in an electromagnetic environment as described below:		
Emissions Test	**Compliance**	**Electromagnetic Environment-Guidance**
RF emissions CISPR 11	Group 1	The Collimator R225 ACS/R225 ACS DHHS uses RF energy only for its internal function. Therefore, its RF emissions are very low and are not likely to cause any interference in nearby electronic equipment.
RF emissions CISPR 11	Class [A]	This R225 ACS/R225 ACS DHHS is suitable for use in all establishments other than domestic and those directly connected to the low voltage power supply network which supplies buildings used for domestic purposes.
Harmonic emissions IEC 61000-3-2	[Not applicable]	
Voltage fluctuations/flicker emissions IEC 61000-3-3	[Not applicable]	
CISPR 14	N.A.	This Collimator is not suitable for interconnection with other equipment.
CISPR 15	N.A.	This Collimator is not suitable for interconnection with other equipment.

Electromagnetic Immunity for All Equipment and Systems

Collimator R225 ACS/R225 ACS DHHS is intended for use in the electromagnetic environmenmt specified below. The customer or the user should assure that it is used in such an environment.			
Immunity Test	**IEC 60601 Test Level**	**Compliance Level**	**Electromagnetic Environment**
Electrostatic discharge (ESD) IEC 61000-4-2	6 kV contact 8 kV air	EN 60601-1-2 test level	Hospital
Electronical fast transient/burst IEC 61000-4-4	2 kV for power supply lines 1 kV for input/output lines >3m	EN 60601-1-2 test level	Hospital
Surge IEC 61000-4-5	1 kV differential mode 2 kV common mode	EN 60601-1-2 test level	Hospital
Voltage dips, short interruptions and voltage variations on power supply input lines IEC 61000-4-11	0% U_n for 0.5 cycles. 40% U_n for 5 cycles 70% U_n for 25 cycles 0% U_n for 5 s	EN 60601-1-2 test level	Hospital
Power frequency (50/60 Hz) magnetic field IEC 61000-4-8	3 A/m	EN 60601-1-2 test level	Hospital

Electromagnetic Immunity for Non Life-Supporting System

The R225 ACS/R225 ACS DHHS collimator is intended for use in the electromagnetic environment specified below. The customer or the user of the collimator should assure that it is used in such an environment.			
Immunity Test	**IEC 60601 Test Level**	**Compliance Level**	**Electromagnetic Environment**
			Portable and mobile RF communications equipment should be used no closer to any part of the R225 ACS/R225 ACS DHHS, including cables, then the recommended separation distance calculated from the equation applicable to the frequency of the transmitter. Recommended Separation Distance
Radiated RF IEC 61000-4-3	3 V/m 80 MHz to 2,5 GHz	3 V/m	d=1.2 $\sqrt{P}$ 80 MHz to 800MHz d=2.3 $\sqrt{P}$ 800 MHz to 2.5GHz
Conducted RF IEC 61000-4-6	3 V/m 150 kHz to 80 GHz	3 V	$d = 1.2 \times \sqrt{P}$
			Where P is the maximum output power rating of the transmitter in watts (W) according to the transmitter manufacturer and d is the recommended separation distance in metres (m).
			Field strengths from fixed RF transmitters, as determined by an electromagnetic site survey, should be less than the compliance level in each frequency range. Interference may occur in the vicinity of equipment marked with the following symbol:

Recommended Separation Distances for Non-Life Supporting Equipment

Collimator R225 ACS/R225 ACS DHHS is intended for use in an electromagnetic environment in which radiated RF disturbances are controlled. The customer or the user of the collimator can help prevent electromagnetic interference by maintaining a minimum distance between portable and mobile RF communications equipment (transmitters) and the collimator as recommended below, according to the maximum output power of the communications equipment.

Rated Maximum Output Power of Transmitter W	**Separation Distance According to Frequency of Transmitter (m)**		
	150 kHz to 80 MHz *d= 1.2 x √P*	**80 MHz to 800 MHz** d = 1.2 x √P	**800 MHz to 2,5 GHz** *d 0 2.3 x √P*
0.01	0.12	0.12	0.23
0.1	0.38	0.38	0.73
1	1.2	1.2	2.3
10	3.8	3.8	7.3
100	12	12	23

For transmitters rated at a maximum output power not listed above, the recommended separation distance *d* in metres (m) can be estimated using the equation applicable to the frequency of the transmitter, where *P* is the maximum output power rating of the transmitter in watts (W) according to the transmitter manufacturer.

NOTE 1 At 80 MHz and 800 MHz, the separation distance for the higher frequency range applies.

NOTE 2 These guidelines may not apply in all situations. Electromagnetic propagation is affected by absorption and reflection from structures, objects and people.

COVER REMOVAL

(1).	
REMOVE THE TWO KNOBS BY UNSCREWING THE DOWEL.	
(2).	
REMOVE CAREFULLY THE SNAP-ON FRONT PANEL.	
(3).	
DISCONNECT THE CONNECTOR.	
(4).	
REMOVE THE TAPE STOP BY LIFTING IT OFF WITH A SCREW DRIVER. GENTLY EASE THE TAPE INTO ITS CONTAINER WITHIN THE COLLIMATOR.	

(5).	
TURN THE COLLIMATOR OVER AND UNSCREW THE FOUR SCREWS PLACED ON THE RAILS.	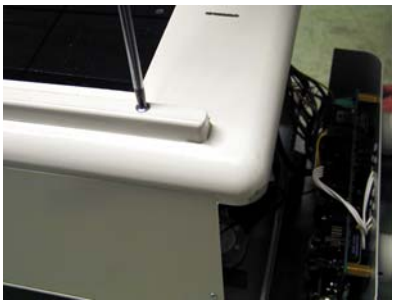
(6).	
REMOVE THE REAR COVER BY UNSCREWING THE FOUR SCREWS.	
(7).	
REMOVE THE LATERAL COVER BY LIFTING IT OFF FROM THE TWO SPACERS.	

ADJUSTMENTS

WARNING:
THIS IS PROVIDED AS AN AID TO THE END USER. RALCO IS NOT LIABLE FOR ANY DAMAGES RESULTING FROM THE ALTERING OF PRESET FACTORY CONFIGURATIONS.

ADJUSTMENTS HAVE BEEN PRESET AT THE FACTORY PRIOR TO SHIPMENT OF THE COLLIMATOR. SHOULD ANY PROBLEM ARISE REQUIRING THE NEED TO RECALIBRATE, PLEASE CONTACT RALCO FOR ASSISTANCE BEFORE PROCEEDING WITH THE ADJUSTMENT.

EXTRA-FOCAL SHUTTERS

The instructions that follow are provided by way of information. The customer is advised to contact Ralco prior to proceeding with the adjustment.

Close the Long and Cross shutters completely either manually or via electronic control.

Remove the covers, see Chapter- **COVER REMOVAL**.

Loosen the Long transmission fixing screw.

Remove the shaft screw.

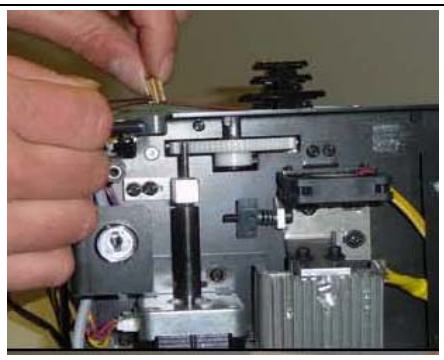

Keeping the Long shutters perfectly closed, manually adjust the movement transmission gear and position the aperture of the long extra-focals to 8.0 mm +/- 0.5.

This value refers to the inside of the upper shutters.

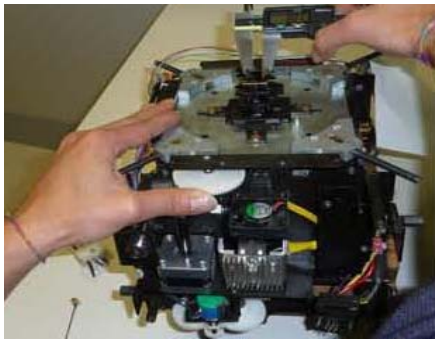

Position the shutters; remount the screw on the transmission shaft.

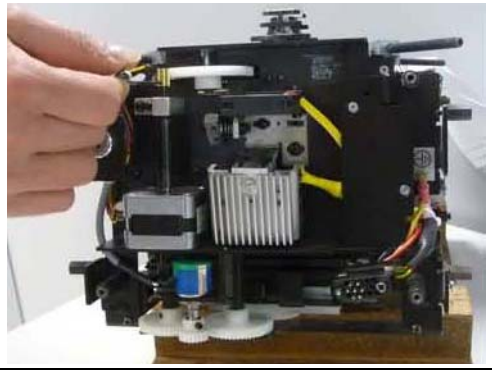

Loosen the Cross transmission fixing screw.

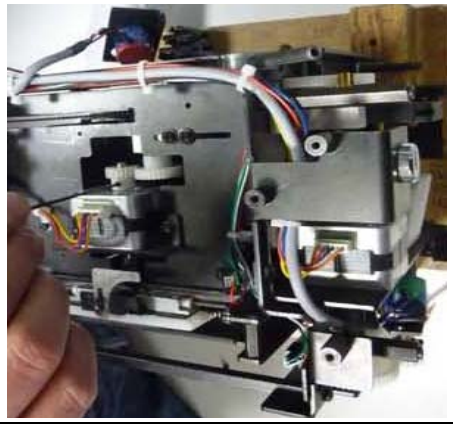

Remove the shaft screw.

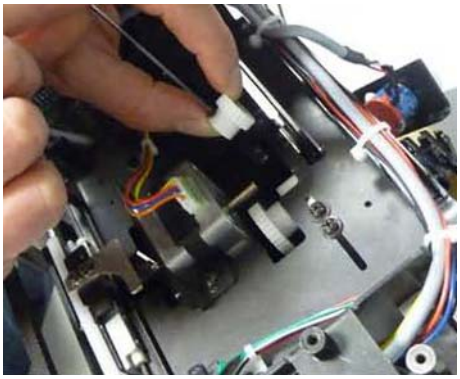

Keeping the Cross shutters perfectly closed, manually adjust the movement transmission gear and position the aperture of the Cross extra-focals to 3.0 mm +/- 0.5.

This value refers to the inside of the upper shutters.

Position the shutters; remount the screw on the transmission shaft.

Remount the collimator covers.

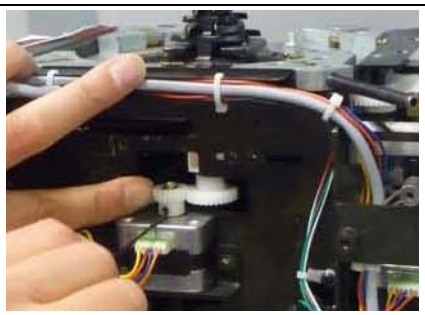

CROSSHAIR ADJUSTMENT

- Activate the light field.
- Adjust the light field to a narrow line for each pair of shutters by turning the two knobs alternately.
- Check that the project cross line is exact halfway between the edges of the shutters, see ***Fig. Cross Line***.
- If adjustment is required, remove the cover from the sides and bottom of the collimator, see Chapter - **COVER REMOVAL.**
- Loosen the four screws securing the plastic panel and adjust the cross lines to coincide with the light lines, see Chapter - **COVER REMOVAL.**
- Tighten the screws.

Fig. Cross Line

LASER LIGHT ADJUSTMENT

The collimator laser is classified as Class 2 (1 m W - wavelength = 645 mm); used for collimator/image receptor center alignment, see ***Fig. Laser Line***.

⚠	CAUTION: CLASS 2 LASER SYSTEM DO NOT STARE INTO THE BEAM.

Laser Adjustment

- Remove part of the cover to access the point of adjustment, see Chapter- **COVER REMOVAL**.
- The line is to fall on a perpendicular cross-line on the plastic anti-dust panel near the collimator controls, see ***Fig. Laser Line.***
- Adjust the position of the line by rotating or moving the base of the laser system.
    - To rotate the laser system, loosen the Allen screw **A**, see ***Fig. Laser Adjustment.***
    - Tighten the Allen screw when the laser beam falls on or is parallel to the bisector line drawn on the anti-dust panel.
- Shift the laser system by loosening the two **B** screws holding the laser system base to the beam limiting device front plate.
    - Move the base until the laser beam falls over the perpendicular bisector line on the anti-dust panel, see ***Fig. Laser Alignment.***
    - Tighten the two **B** screws.

⚠	DO NOT APPLY EXCESSIVE FORCE TO THE SCREW. THE LASER SHELL IS IN PLASTIC AND EXCESSIVE PRESSURE COULD CRACK THE PLASTIC AND POSSIBLY SHORT-CIRCUIT THE LASER.

Substitution

- Disconnect supply.
- Remove the cover, see Chapter- **COVER REMOVAL**.

Fig. Laser Line

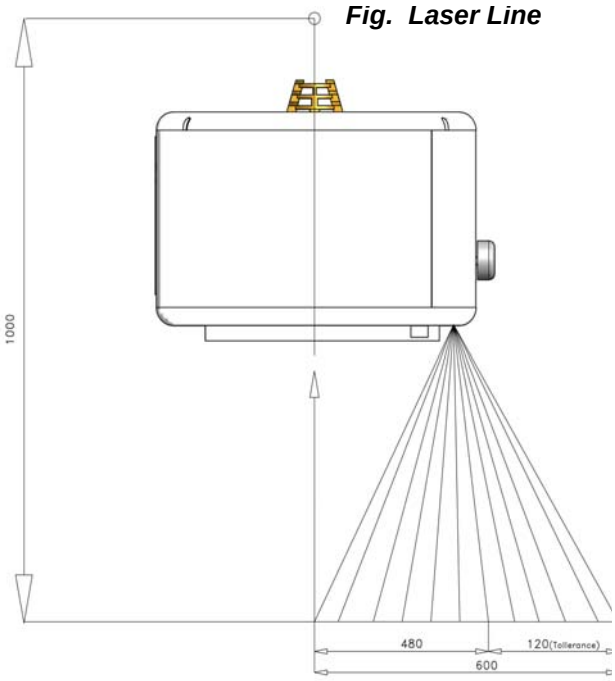

Fig. Laser Adjustment

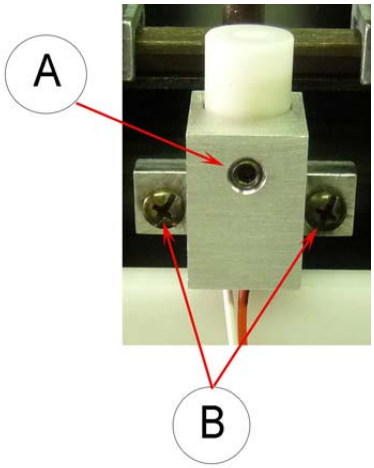

Fig. Laser Alignment

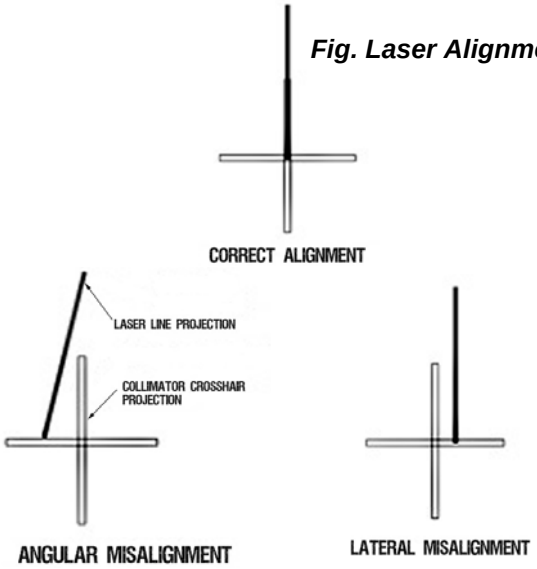

- Unscrew the fixing Allen screws **A**, see ***Fig. Laser Adjustment.***
- Disconnect the timer cables from the terminal board - white 0 V, red 5 V.
- Remove the laser and substitute with an identical item.
- Tighten the screws.
- Check the laser alignment, see Chapter- **ADJUSTMENTS**.
- Remount the cover, see Chapter- **COVER REMOVAL**.

Classification EN 60825-1 par. 1 -5: Class 2 laser product => Red laser line.

Fig. Laser Control

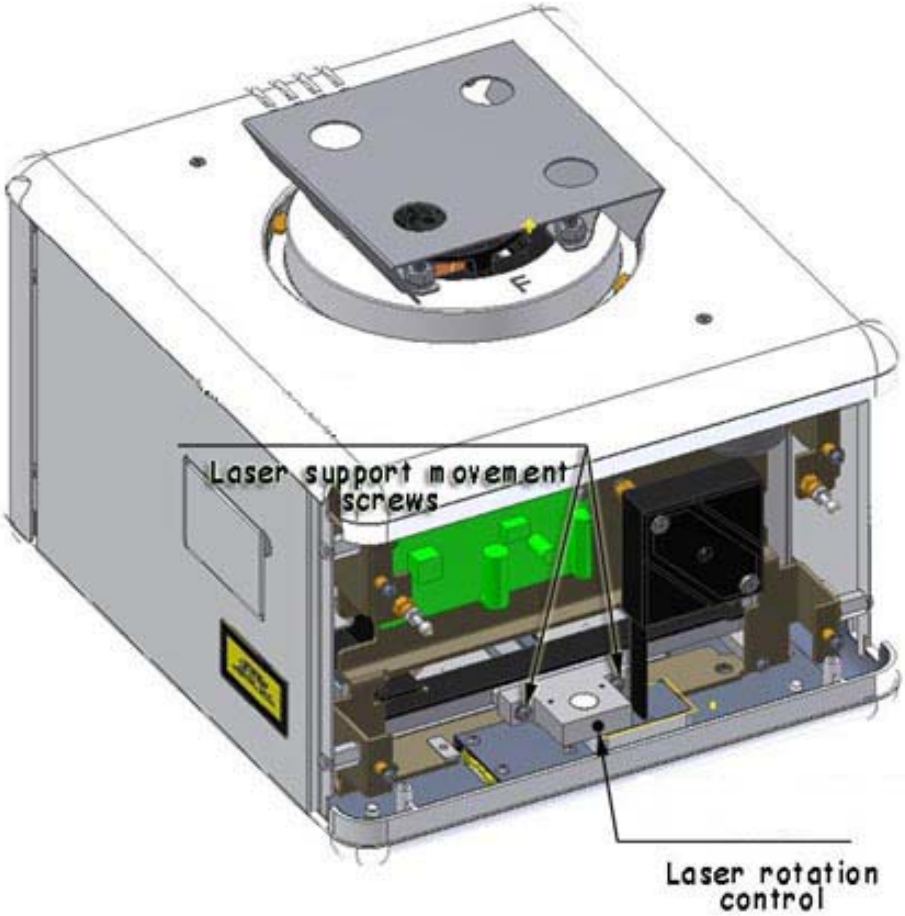

TROUBLESHOOTING

A faulty Collimator must not be used until it is repaired and checked.
The use of a faulty collimator might impair the safety of the operator and patient.

Before returning the collimator to Ralco for repair, please make sure that the fault is not caused by one of the problems listed below. If the indications provided fail to solve your fault, **please make sure that you obtain a Return number (RMA) from Ralco for the collimator**, see Chapter - **GENERAL**, paragraph **Repairs**.

Light Source

Problem	Cause	Solution
The light source fails to switch ON	Collimator supplied incorrectly	Check Supply/Tension/Current/ Polarity/Fuses, see Chapter- **INSTALLATION**, paragraph **Electrical Connection**, or Chapter- **ELECTRONIC SYSTEM**
	Faulty light source	Check item. Replace if necessary, see Chapter- **SUBSTITUTIONS**

Centering

Problem	Cause	Solution
The light field of the collimator is not centered	The mirror or light source are not positioned correctly	See Chapter- **CALIBRATION**, paragraph **Light Field to X-ray Field Alignment**

Shutters

Problem	Cause	Solution
Shutters do not hold position	Photocells are faulty or incorrectly calibrated	See Chapters- **ELECTRONIC SYSTEM, SYSTEM START-UP,** or **CANBUS MESSAGES**
Shutters fail to move	External electronics faulty	See Chapters- **ELECTRONIC SYSTEM, SYSTEM START-UP,** or **CANBUS MESSAGES**
	The motor is faulty	Substitute the motor, see Chapter- **SUBSTITUTIONS**

SUBSTITUTIONS

LED SUBSTITUTION

- Disconnect supply.
- Remove the cover, see Chapter - **COVER REMOVAL.**
- Remove the LED protection heatsink.
- Unsolder two wires, see ***Fig. LED Substitution.***
- Unscrew two fixing screws, see ***Fig. LED Substitution.***
- Remove the faulty LED.
- Substitute the LED with an identical item; handle it gently and make sure it doesn't get dirty.
- Tighten the two fixing screws.
- Solder the two wires.
- Check on light field/X-ray field correspondence.

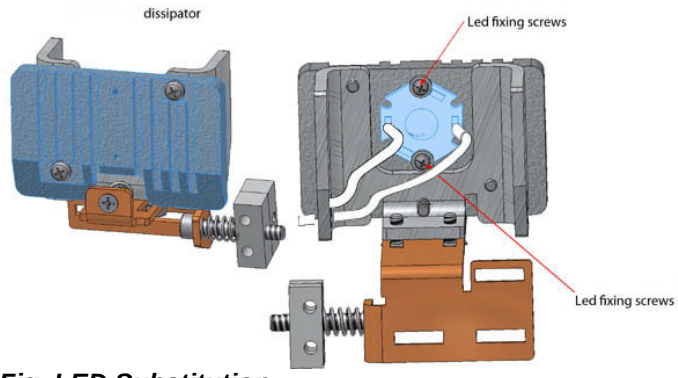

Fig. LED Substitution

SUBSTITUTION OF SQUARE FIELD MOTORS

- Disconnect supply.
- Remove the cover, see Chapter - **COVER REMOVAL.**
- Disconnect the motor connector.
- Unscrew the motor support screws **A**, see ***Fig. 1*** and/or ***Fig. 3***.
- Unscrew the Allen screws **B**, see ***Fig. 2***.
- Substitute the support with an identical part.
- Remount the support with a new motor.
- Reconnect the connector.
- Mount the front panel.

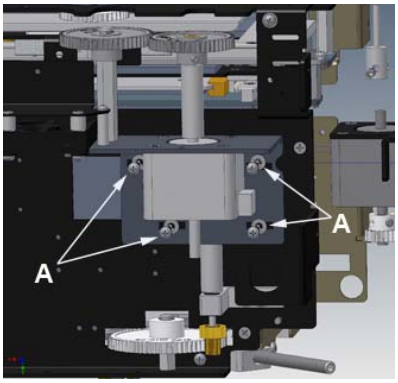

Fig. 1

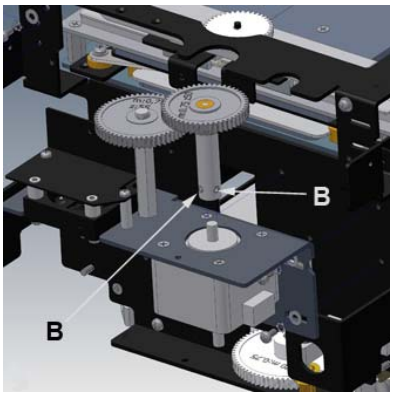

Fig. 2

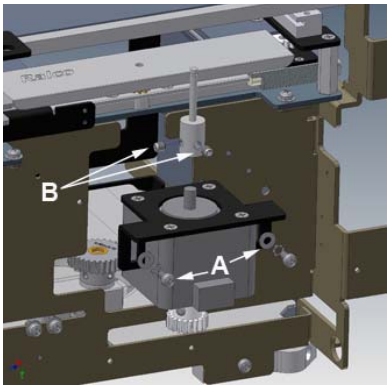

Fig. 3

⚠	PLASTIC GEARS ARE NOT ALWAYS UNIFORM. POSSIBLE DEFORMATION COULD HARDEN OR BLOCK MOVEMENTS. CHECK THAT MOVEMENTS ARE FREE FROM OBSTRUCTIONS ALLOWING THE LEAST PLAY POSSIBLE BETWEEN GEARS.

.

SUBSTITUTION OF THE MIRROR

- Remove the collimator cover, see Chapter - **COVER REMOVAL.**
- Remove the four screws on the upper left partition, see ***Fig.1*.**
- Lift off the upper part of the right-hand partition, see ***Fig. 2*.**
- Substitute the mirror and remount in reversed order, see ***Figure 3.***

Fig. 1 Substitution of the Mirror

Fig. 2Substitution of the Mirror

Fig. 3 Substitution of the Mirror

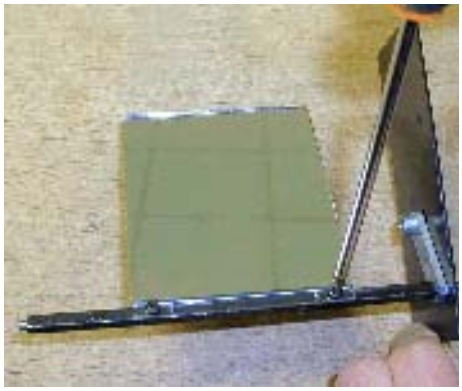

SPARE PARTS

NOTE: When ordering spare parts, the customer is requested to specify the collimator model and serial number.

R225 ACS/R225 ACS DHHS STANDARD

Code	Description
RS 409	Laser
RS 665	Photocell shutters and filter
RS 754	Guide for accessories, right
RS 755	Guide for accessories, left
RS 781	Switch
RS 931	Key
RS 940	Mirror adjustment plate
RS 1004	Upper cover, plastic
RS 1009	Step Motor - square shutters
RS 1010	Anti-dust plastic window
RS 1011	Tape measure, steel, retractable
RS 1012	Flange
RS 1013	Glass mirror with support
RS 1064	GC-Led-5A board
RS 1065	Power LED
RS 1106	Fan, LED
RS 1120	Knob
RS 1124	Front panel
RS 1125	Rear cover
RS 1126	Left lateral cover
RS 1127	Cover, plastic rear
RS 1129	Right lateral cover
RS 1162	RSR 008 PCB internal board
RS 1259	Cover, lateral right in plastic
RS 1260	Cover, lateral left in plastic
RS 1261	Cover, upper plastic
RS 1262	Rear cover
RS 1263	Rear cover in plastic
RS 1264	Front panel in plastic
RS 1277	Spacer guide, right, for DAP chamber
RS 1278	Spacer guide, left, for DAP chamber

Labels

R225 ACS DHHS

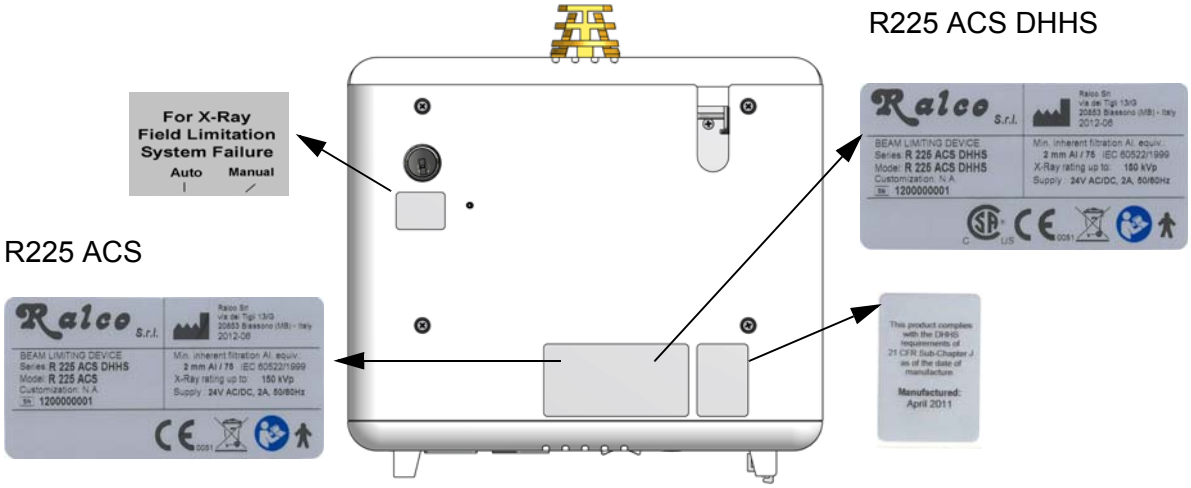

R225 ACS

External Board

CE Laser Labels

LABEL 1

LABEL 2

FDA Laser Labels

LABEL 1

LABEL 3

LABEL 4

LABEL 5

Parts Breakdown

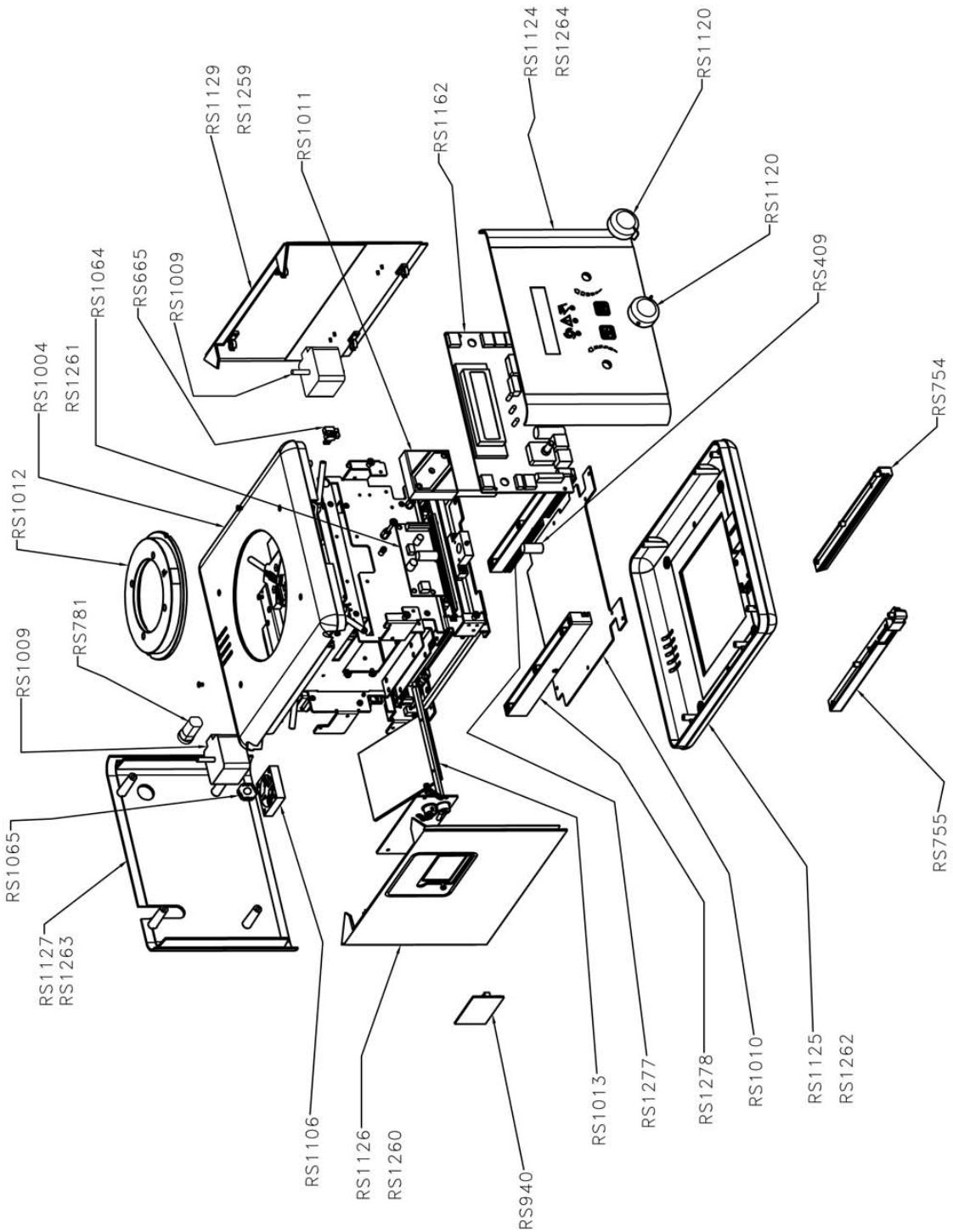

OPTIONAL ITEMS

This collimator may have the following optional items; a detailed description is provided in this chapter.

RO 002 Iron Spacer

This accessory is used for the mounting flange; 1.5 mm thickness.

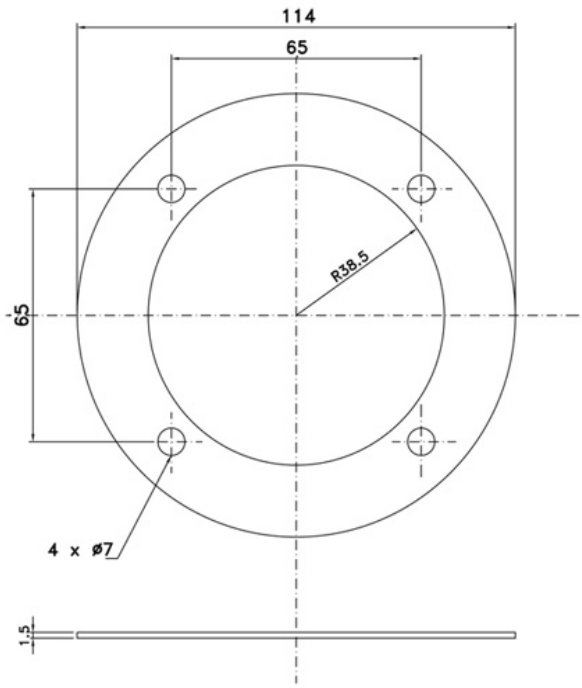

RO 041 Mylar Mirror

Mylar mirror, internal filtration equivalent at minimum 0.3 mm Al.

RO 063 Final Control Testing

This test provides higher control to check 100% of the production lot to verify product quality from beginning to end of the production cycle.

Final tests include:

- Light field illumination intensity (if applicable),
- Light field to X-ray field alignment (if applicable),
- X-ray leakage test,

- Edge contrast (if applicable),
- Operation and electronic check up.

RO 074 Customized Housing

The customer can specify a collimator housing color. Ralco's standard color is RAL9003.

RO 082 Mirror

Glass mirror, 0.8 mm thickness, inherent filtration 1 mm Al equivalent. With this mirror, the collimator equivalent filtration value of 2 mm Al is reduced to 1 mm Al.

RO 096 Customized Wiring

Customized electrical wiring, if ordered please see Chapter- **PERSONALIZATIONS**, paragraph **Wiring Diagram**.

RO 107 Customized Knobs

The customer can specify the required knob color.

RO 111 Customization of Front Panel

The customer can customize the front panel adding, for example, the Company Logo and/or the Company colors.

RO 203 Auto-Centering Siemens Type Cover

This cover is designed to allow the attachment of the collimator to a Siemens X-ray tube.

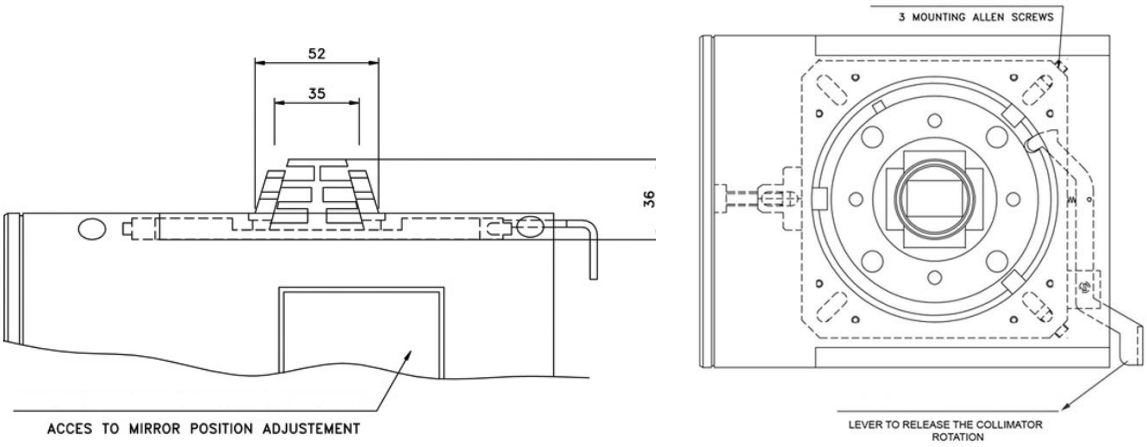

RO 210 Aluminium Accessory Guides

Aluminium accessory guides used to input filters or ionization chamber.

RO 240 Focus-Skin Distance Spacer

This accessory ensures a minimum safety distance (309.5 mm) between the X-ray focus and the patient.

THIS ACCESSORY DEALS WITH PREVENTING THE USE OF INAPPROPRIATE SMALL FOCUS/SKIN DISTANCES IN ORDER THAT THE DOSE EQUIVALENT TO THE PATIENT BE KEPT AS LOW AS REASONABLY POSSIBLE.

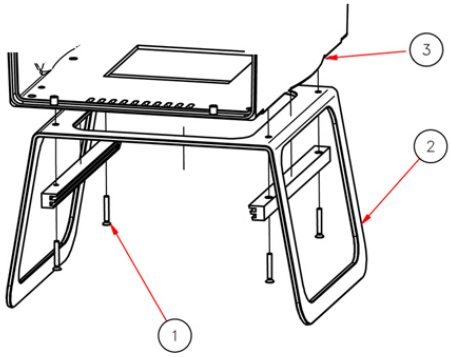

1 - Countersunk Screws, 2 - Focus-Skin Distance Spacers, 3 - Collimator Cover.

RO 242/2 Second Laser Cross Projection

Second laser which serves to center the patient using the cross projection.

The collimator lasers are classified as Class 2 (1 m W - wavelength = 645 mm) and are used for collimator/ image receptor center alignment.

	CAUTION: CLASS 2 LASER SYSTEM DO NOT STARE INTO THE BEAM.

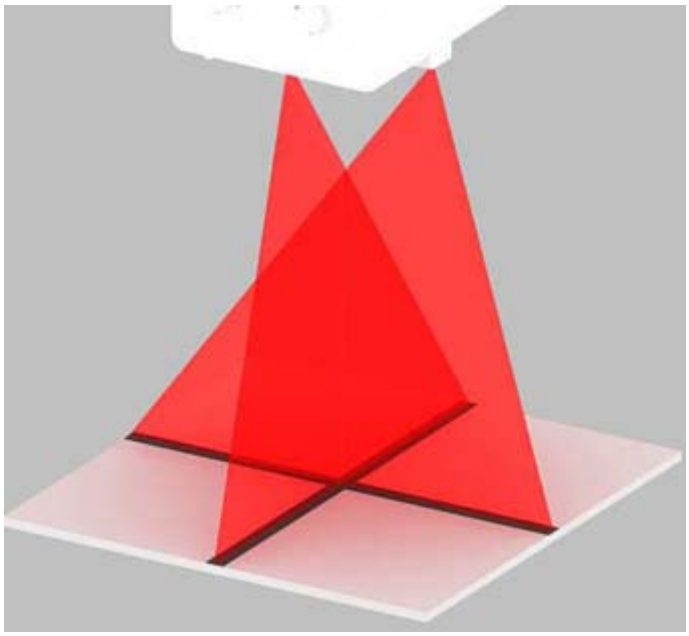

CALIBRATION CONTROL

- Draw a cross (two lines at 90°) on a sheet of paper and use this as reference.
- Switch the light ON and set the sheet of paper at 1 m from the focus.
- Make sure the cross on the paper coincides exactly with the two lines silk-screened on the plastic window.
- Examine the laser projections on the paper: the laser is correctly calibrated when the projections coincide with the lines drawn on the paper, otherwise an adjustment will be necessary.

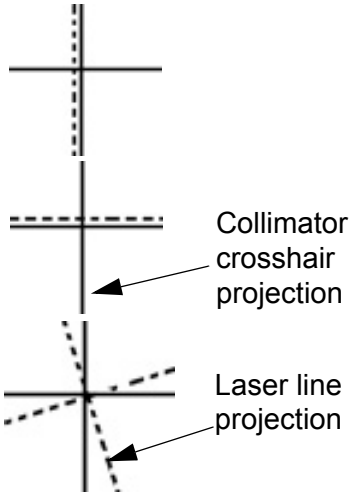

Fig. Laser projections

ADJUSTMENT

Horizontal

- Disconnect power supply.
- Remove the laser cover located on the rail by unscrewing the two screws **A**, see ***Fig. Horizontal Laser***.
- To correct horizontal misalignment, loosen the screws **B**, see ***Fig. Horizontal Laser*** and move the laser support until the projected laser line coincides with the cross on the sheet of paper. Tighten screws **B.**

Vertical

- Disconnect power supply.
- Remove the knobs and front panel, see Chapter- **COVER REMOVAL**.
- To correct vertical misalignment, loosen the Allen screw **A,** see ***Fig. Vertical Laser*** on the laser support; rotate the laser and align the laser line over the cross on the sheet of paper. Tighten **B** screw s**.**

⚠	DO NOT APPLY EXCESSIVE FORCE TO THE SCREW. THE LASER SHELL IS IN PLASTIC AND EXCESSIVE PRESSURE COULD CRACK THE PLASTIC AND POSSIBLY SHORT-CIRCUIT THE LASER.

SUBSTITUTION

Horizontal

- Disconnect supply.
- Remove the laser cover located on the rail by unscrewing the two screws **A**, see ***Fig. Horizontal Laser***.
- Disconnect the timer cables from the terminal board - white 0 V, red 5 V.
- Remove the laser and substitute with an identical item.
- Tighten the screws.
- Check the laser alignment, see paragraph ***ADJUSTMENT***.
- Remount the laser cover.

Vertical

- Disconnect supply.
- Remove the knobs and front panel, see Chapter- **COVER REMOVAL**.
- Loosen the Allen screw **A,** see ***Fig. Vertical Laser*** on the laser support.
- Disconnect the timer cables from the terminal board - white 0 V, red 5 V.
- Remove the laser and substitute with an identical item.
- Tighten the Allen screw.
- Check the laser alignment, see paragraph ***ADJUSTMENT***.
- Remount the laser cover.

Classification EN 60825-1 par. 1 -5: Class 2 laser product => Red laser line.

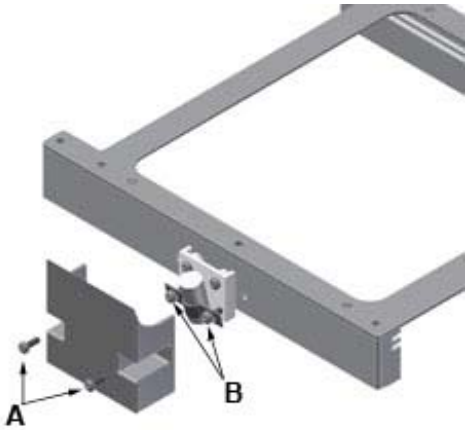

Fig. Horizontal Laser

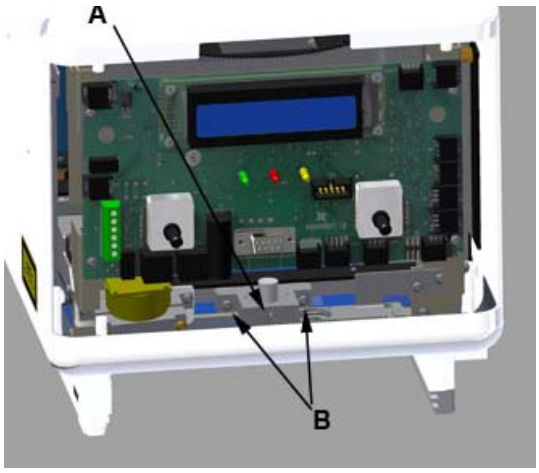

Fig. Vertical Laser

RO 278 Extra-Focal Shutters

Upper cover with extra-focal shutters to allow the use of the collimator with rotating anode X-ray tubes; brass extra-focal.

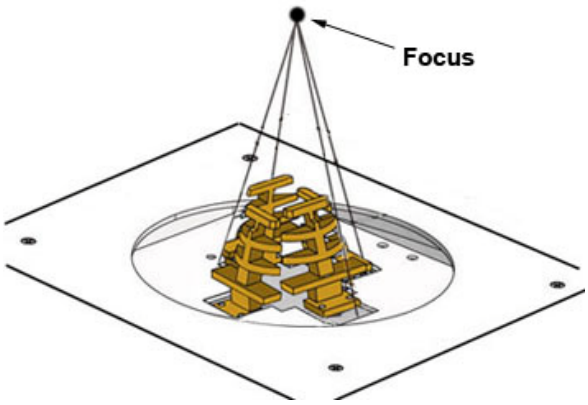

RO 305 Additional Variable Filtration

Additional variable filtration may be added to the minimum collimator filtration in the form of an aluminium disk, 1 mm thickness, with automatic control via the electronic PCB.

The disk features a hole allowing the passage of

X-rays and includes three filters with the following filtration values:

- 0: no filtration
- 0,1 mm Cu 1 mm Al. (Al eq. 2.8 mm)
- 0,2 mm Cu + 1 mm Al (Al eq. 5.6 mm)
- 1 mm Al + 1 mm Al support.

Adjustments

Photocell Adjustment

- Remove the front panel, see Chapter- **Cover Removal**.
- Disconnect the connector from the RSR008 PCB.
- Unscrew the 4 screws **D** holding the RSR008 PCB on the front plate, see ***Fig. 1.***
- Unscrew the 2 screws **C** holding the filter system on the front plate, see ***Fig. 2.***
- Remove the support together with the filter from the collimator.
- Adjust the photocell by using the 2 screws **B** located on the support, see ***Fig. 3.***
- When adjusted is terminated, tighten the **B** screws, see ***Fig. 3***
- Remount the support and the front plate.

Substitutions

Substitution of the Filter Motor

- Disconnect supply.
- Remove the front panel.
- Remove the cover, see Chapter - **Cover Removal.**
- Disconnect motor connector J8 on board **RSR008.**
- Unscrew the 2 screws **A** from the front wall, see ***Fig. 4.***
- Substitute with an identical item.
- Remount the support with the new motor.
- Connect the connector removed previously.
- Remount the cover and front panel.

Fig. 1

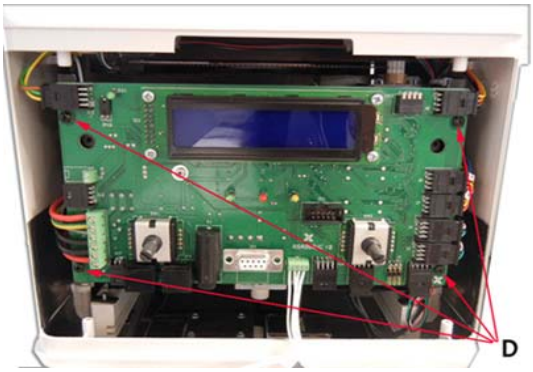

Fig. 2

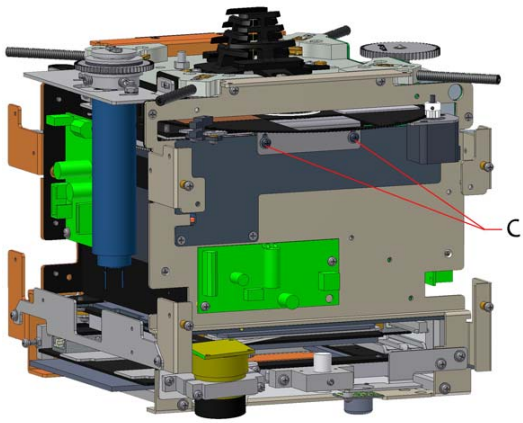

Fig. 3

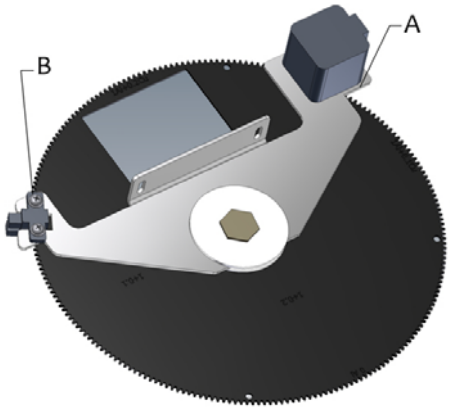

SUBSTITUTION OF FILTER MOVEMENT PHOTOCELL

- Disconnect supply.
- Remove the front panel.
- Remove the cover, see Chapter - **COVER REMOVAL.**
- Disconnect the four photocell cables on terminal J2 on the board **RSR008.**
- Unscrew the 2 screws **B** from the front wall, see ***Fig. 3.***
- Substitute with an identical item.
- Remount the support with the photocell.
- Connect the four photocell cables on terminal J2.
- Remount the cover and front panel.

Fig. 4

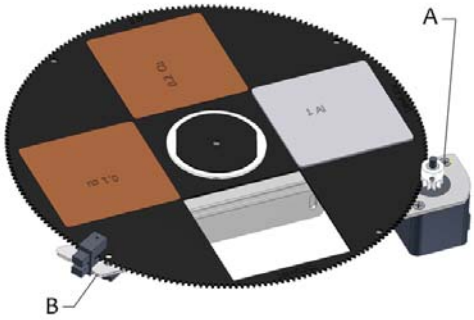

RO 308 External Board ASR003

ASR003 Board

Characteristics

- Analogical/ Digital interface.
- Vertical SID interface with potentiometers for table and stand, Potter Bucky, (vertical, right, left) inputs.
- Interface for 5 fixed lateral distances.
- Interface for general controls; e.g., open/close for shutters, tomography.
- CanBus interface.

Description

- Board ASR003 is an extension of the radiological system, providing an interface for the collimator to other system devices with analogical signals.
- It operates via CAN BUS with a Ralco proprietary protocol.
- The user end features 32 digital inputs, 8 analogue inputs and 10 relay outputs.
- Digital inputs are optoisolated to allow connection to devices that supply output control voltages (typical range 12-32 V DC).
- Supply: 24 V AC 50/60 Hz 2.5 A.
- Fuse: n.a. (not supplied by Ralco).

Digital and Analogue Inputs

Digital Input

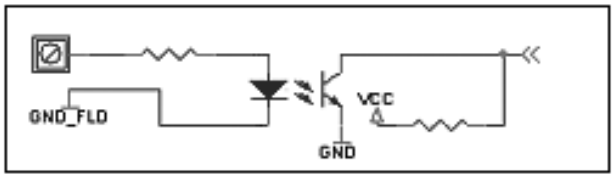

Since the input signal sometimes comes from a voltage-free contact, the board features a number of pins to which an external supply may be connected. As an alternative, these pins may be connect to a voltage incoming from board ASR003 itself by simply connecting pin M79 to pin M80 and, pin M81 to pin M82.
The available voltage is not taken upstream of the voltage regulator but downstream of the fuse and rectifier bridge.
The type of software applied determines the function of each input.

.

Analogue Input

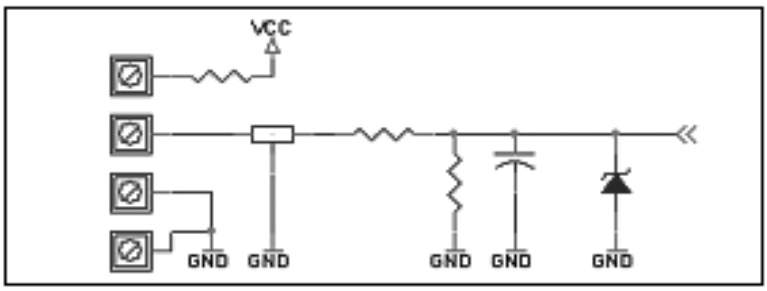

In this case the input range will be reduced with respect to the digitalization capacity of the microprocessor digital/analogue convertor. However, the board will have better protection against wrong Potentiometer connections.

The analogue inputs are designed primarily for connection to 1 Kohm potentiometers.

Additional safeguards have been added because the user could supply an analogue signal directly without using potentiometers.

The main purpose of these inputs is to furnish the collimator with the cassette size data and information related to focus-film/focus-floor distances (depending on the configuration).

In general, non linearity introduced by the safeguards is contained. However, should a greater degree of precision be required (such as in the case of focus-film/focus-floor signals) we suggest that a voltage between 0 and 6 V DC be supplied so as to make the most of the convertor range.

Higher voltages up to 12 V, which could be caused by incorrect connections, will not damage the input.

The 10 output relays each have an NO/NC contact and may consequently be adapted to a number of different configurations. Their use depends on the software applied.

This board also supplies the go-ahead to program some of the system parameters.

Mechanical Installation of the External Interface Unit

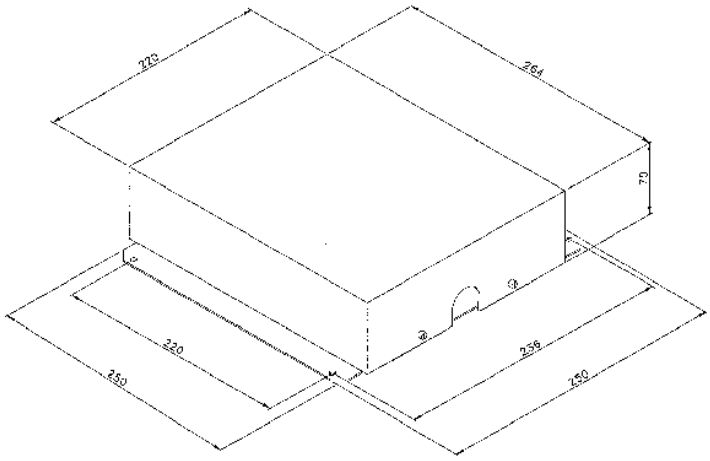

The external box is to be installed in such a way as to ensure connection of all the electric devices present in the radiological system.

We suggest that the box be installed at a safe distance from electromagnetic sources such as high voltage transformers.

Use the holes on the sides of the box to perform the installation.

Should it be necessary to install the board within a rack of the general system, remove the electronic board from the box prior to proceeding with the installation of the box itself.

Make sure that each portion of the rack that is to accommodate the box is adequately earthed.

Electrical Connection

	POWER MUST BE SUPPLIED BY A SAFETY TRANSFORMER COMPLIANT WITH CURRENT NORMS AND PROTECTED BY AN FUSE 4 A.

- Connect the collimator using the RO 330 cable. The cable end with the AMP 201298-1 connector is to be inserted into the connector at the back of the collimator, see ***Fig.2***.
- The other end of the cable, with the DB9 connector and 3 wires, must be connected to the CanBus interface and power supply, see ***Fig. 1***.
- Consult the electric drawing to perform a correct connection of inputs.

Fig. 1

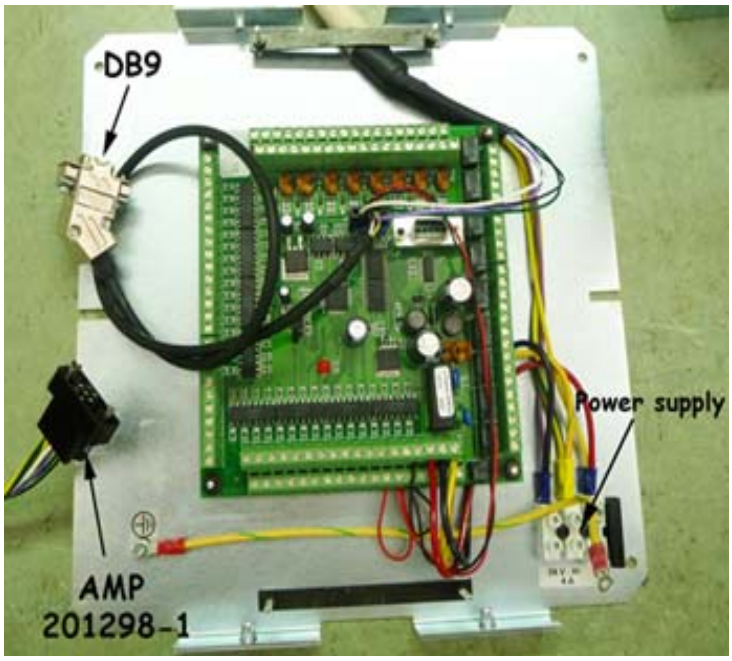

Fig. 2

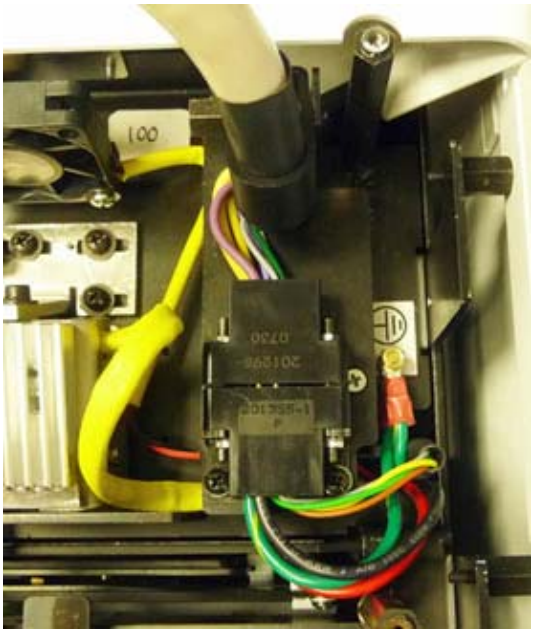

Connector	Pin	Color	Connection
DB9	Pin 1		
DB9	Pin 2	green	Signal Can-L
DB9	Pin 3	white	GND - Shield
DB9	Pin 4	brown	
DB9	Pin 5		
DB9	Pin 6		
DB9	Pin 7	yellow	Signal Can-H
DB9	Pin 8		
DB9	Pin 9		
Wire		red	Supply 24 V AC

COLLIMATOR SUPPLY IS NOT PROTECTED BY A FUSE. PRIOR TO CONNECTING THE COLLIMATOR, CHECK THAT SUPPLY IS PROTECTED BY AN EXTERNAL FUSE 4A, NOT SUPPLIED BY RALCO, SEE CHAPTER- **SPECIFICATIONS**.

SUPPLY CABLES (24 V AC) USED FOR COLLIMATOR CONNECTION MUST BE SUITABLE FOR THE PURPOSE AND COLLIMATOR CURRENT ABSORPTION.(MIN. SECTION 1.5 MM2).

THE SYSTEM REQUIRES SCREENED CABLES WITH THE ADDITION OF FERRITE CORES (NOT SUPPLIED) TO AVOID ELECTROMAGNETIC INTERFERENCE WITH THE SERVER ELECTRONICS.
CABLES FROM THE SYSTEM TO THE EXTERNAL BOARD MUST BE SCREENED.
THE FERRITE CORES ARE TO BE MOUNTED ON THE CABLES INSIDE THE BOX AS SHOWN IN THE DRAWING BELOW. FERRITE CORES ARE USED TO ATTENUATE INDUCTION AND IRRADIATION OF ELECTROMAGNETIC INTERFERENCE.
WE SUGGEST A 279 FERRITE, ATTENUATION RANGE 100 MHZ TO 200 MHZ, SUITED TO YOUR CABLES; IE: MSFC-10 FERRITE BY RICHCO.

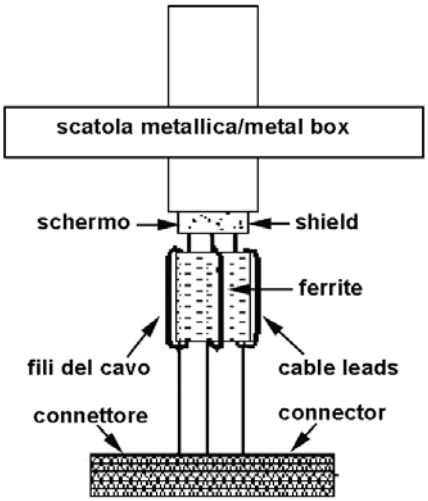

THE WIRING DIAGRAM INCLUDED IN THIS CHAPTER REFERS TO THE STANDARD PRODUCT. IT IS THE RESPONSIBILITY OF THE CUSTOMER WHO HAS REQUESTED AN ELECTRIC CUSTOMIZATION, TO ENSURE THAT AN ELECTRIC DIAGRAM RELATING TO THE CUSTOMIZATION HAS BEEN PROVIDED WITH THE DOCUMENTATION.

Supply and signals to the collimator must be to 2007/47/CE standards. Devices that supply to the collimator must therefore feature double or reinforced insulation as provided by the General Standard on Electro-medical Equipment CEI62-5 +A2 (EN 60601-1).

The device is electrostatic sensitive, consequently all the relating safety standards must be complied with.

COLLIMATOR MUST BE SUPPLIED AS SPECIFIED, SEE CHAPTER- **SPECIFICATIONS.** THE SUPPLY MUST COME FROM A SEPARATE SOURCE FROM THE POWER NETWORK THROUGH DOUBLE INSULATION OR REINFORCED INSULATION AND WITH LIMITED CURRENT. TRANSFORMER CHARACTERISTICS MUST CONFORM TO THE REQUIREMENTS OF STANDARD IEC 60601-1.

CABLES AND TERMINALS USED FOR THE INTERNAL CONNECTION OF THE COLLIMATOR MUST BE SUITABLE FOR OPERATION AT TEMPERATURES OF 70°C AND COLLIMATOR CURRENT ABSORPTION.

Connection of System to ASR003 Board

All the system devices listed in the following tables (variable SID table, variable SID stand, fixed lateral SID, vertical Bucky, lateral Bucky, etc.) are to be connected to the connectors of the external board. **Correct operation of the system is guaranteed if the return signals from the Bucky (if mounted) and SID Potentiometers are clean and devoid of electrical disturbances. Use tri-polar screened cables with the addition of ferrite cores near the connections to the PC board (external unit).**

The SID variation control signal must be analogue DC, 5 V DC max.

TAKE CARE THAT ELECTRICAL RESIDUES HOWEVER SMALL (BITS OF COPPER LEADS FROM WIRES, ETC.) ARE NOT LEFT TO CLUTTER THE CIRCUIT - THESE COULD CAUSE BOARD MALFUNCTION OR ANOMALIES.

Earthing of the collimator circuit is used to disperse noise or extra voltage coming from the collimator supply system.

The device that disperses noise is reversible, consequently noise instead of being eliminated is fed into the system power supply circuit. Therefore, it is essential that the earth outlet to which the system is connect be effectively the unipotential protection point of the system or the room.

POWER SUPPLY		
IN-AN	Supply 24 V AC	**M83**
IN-AN	Supply 24 V AC	**M84**
IN/OUT	Mains Ground Contact	**M85**

IN =	Digital Input Signal
IN-AN =	Analogical Input Signal
OUT=	Output Signal

Fig. ASR003 Board

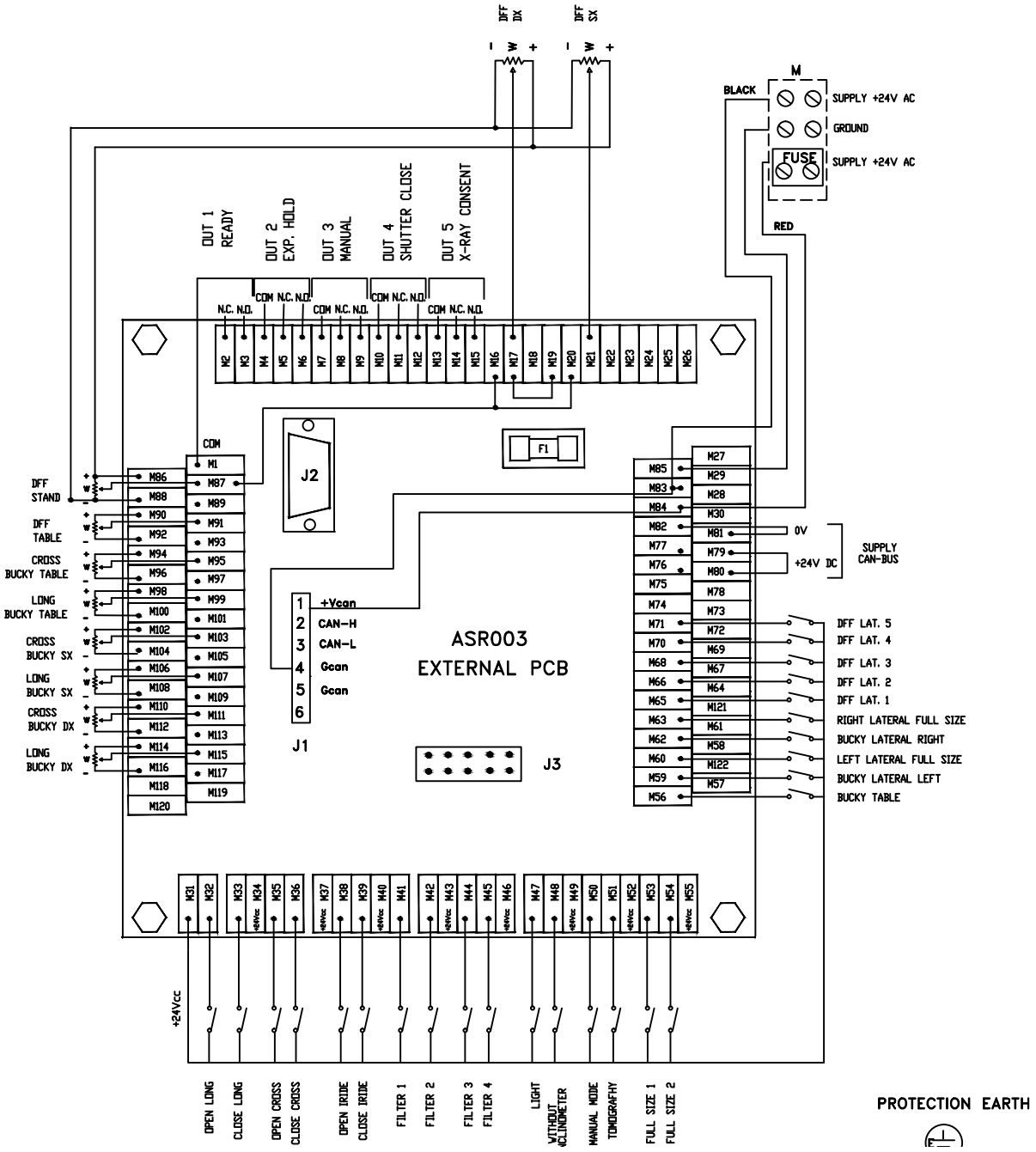

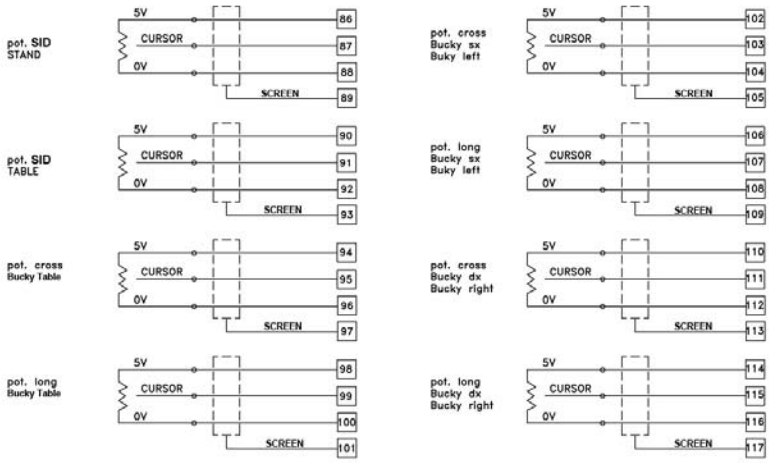

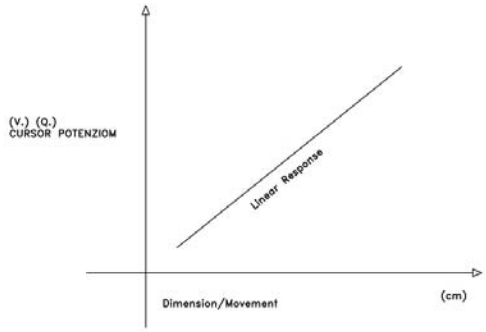

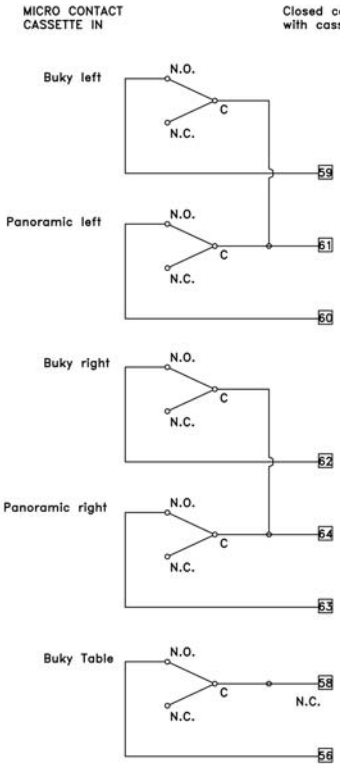

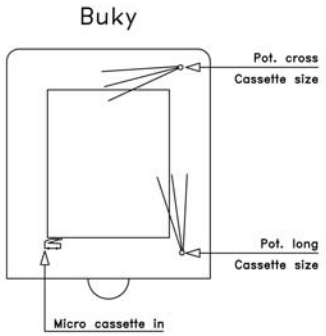

R225 ACS/R225 ACS DHHS - Optional Items

OUTPUTS
All outputs are simple relay contacts (1 A 24 V DC) configured as normally open.Output relays can switch 1 A to 110 V AC or 30 V DC; do not exceed these values and provide fuses on load supply circuits.
If relays are used to switch inductive loads (coils of other relays), provide these loads with appropriate snubber R-C circuits.
Should an electric signal be produced by a multi-contact relay, ground the contacts surrounding the signal or set them at minimum potential (max. 24 V) by using a snubber circuit for the relating load.

Signal	Description	Contacts	
OUT1	With closed contact the system is in "Ready " mode	**COM**	**M1**
		N.C.	**M2**
		N.O.	**M3**
OUT2	With closed contact the system is in “Exp.Hold” mode	**COM**	**M4**
		N.C.	**M5**
		N.O.	**M6**
OUT3	With closed contact system is in “Manual”	**COM**	**M7**
		N.C.	**M8**
		N.O.	**M9**
OUT4	Closed contact: “Closed Shutters”	**COM**	**M10**
		N.C.	**M11**
		N.O.	**M12**
OUT5	With closed contact the system allows the X-ray “Exposure”	**COM**	**M13**
		N.C.	**M14**
		N.O.	**M15**

Signal	Contact	Description
IN	**M31**	Common +V DC
IN	**M32**	Long shutters open
IN	**M33**	Long shutters closed
IN	**M34**	Common +V DC
IN	**M35**	Cross shutters open
IN	**M36**	Cross shutters closed
IN	**M37**	Common +V DC
IN	**M38**	Iris shutters open
IN	**M39**	Iris shutters closed
IN	**M40**	Common +V DC
IN	**M41**	Filter selection 1
IN	**M42**	Filter selection 2

Signal	Contact	Description
IN	**M43**	Common +V DC
IN	**M44**	Filter selection 3
IN	**M45**	Filter selection 4
IN	**M46**	Common +V DC
IN	**M47**	Collimator Light ON
IN	**M48**	Exclusion of collimator tilt device
IN	**M49**	Common +V DC
IN	**M50**	Manual Mode selection
IN	**M51**	Tomography Mode selection
IN	**M52**	Common contacts selection (+V DC)
IN	**M53**	Contact for the fixed lateral full size SID - 1
IN	**M54**	Contact for the fixed lateral full size SID - 2
IN	**M55**	Common contacts selection (+V DC)
IN	**M56**	Cassette IN contact, table Bucky
IN	**M57**	Fluoro 1
IN	**M58**	Common contact table Bucky (+V DC)
IN	**M59**	Cassette IN contact, left lateral Bucky
IN	**M60**	Cassette IN contact, full size left lateral
IN	**M61**	Common contact and full size left lateral (24 V DC)
IN	**M62**	Cassette IN contact, right lateral Bucky
IN	**M63**	Cassette IN contact, full size right lateral
IN	**M64**	Common contacts Bucky and full size right lateral (+V DC)
IN	**M65**	Contact for the fixed lateral SID -1
IN	**M66**	Contact for the fixed lateral SID - 2
IN	**M67**	Common contacts Bucky and full size right lateral (+V DC)
IN	**M68**	Contact for the fixed lateral SID - 3
IN	**M69**	Fluoro 2
IN	**M70**	Contact for the fixed lateral SID - 4
IN	**M71**	Contact for the fixed lateral SID - 5
IN	**M72**	Common contacts of fixed lateral SIDs (+V DC)
IN	**M73**	Common contacts of fixed lateral SIDs (+V DC)
IN	**M74**	Fluoro 3
IN	**M75**	Fluoro 4
IN	**M76**	Fluoro 5
IN	**M78**	Common contacts of fixed lateral SIDs (+V DC)

Signal	Contact	Description
IN-AN	**M86**	Potentiometer SID/tube-stand terminal (high-level 5 V DC)
IN-AN	**M87**	Potentiometer SID/ tube-stand slider
IN-AN	**M88**	Potentiometer SID/ tube-stand terminal (low-level 0 V DC)

Signal	Contact	Description
IN-AN	**M89**	Cable shielding of potentiometer SID/ table
IN-AN	**M90**	Potentiometer SID/Table terminal (high-level 5 V DC)
IN-AN	**M91**	Potentiometer SID/Table slider
IN-AN	**M92**	Potentiometer SID/Table terminal (low-level 0 V DC)
IN-AN	**M93**	Cable shielding of potentiometer SID/Table
IN-AN	**M94**	Cross potentiometer/table Bucky terminal (high-level 5 V DC)
IN-AN	**M95**	Cross potentiometer/table Bucky slider
IN-AN	**M96**	Cross potentiometer/table Bucky terminal (low-level 0 V DC)
IN-AN	**M97**	Cable Shielding of Cross potentiometer/table Bucky
IN-AN	**M98**	Long pot./table Bucky terminal (high-level 5 V DC)
IN-AN	**M99**	Long potentiometer/table Bucky slider
IN-AN	**M100**	Long potentiometer/table Bucky terminal (low-level 0 V DC)
IN-AN	**M101**	Cable Shielding of Long potentiometer/table
IN-AN	**M102**	Cross potentiometer/left lateral Bucky terminal (high-level 5 V DC)
IN-AN	**M103**	Cross potentiometer/ left lateral Bucky slider
IN-AN	**M104**	Cross potentiometer/ left lateral Bucky terminal (low-level 0 V DC)
IN-AN	**M105**	Cable Shielding of Cross potentiometer/ left lateral Bucky
IN-AN	**M106**	Long potentiometer/left lateral Bucky terminal (high-level 5 V DC)
IN-AN	**M107**	Long potentiometer/left lateral Bucky slider
IN-AN	**M108**	Long potentiometer/left lateral Bucky terminal (low-level 0 V DC)
IN-AN	**M109**	Cable Shielding of Long potentiometer/ left lateral Bucky
IN-AN	**M110**	Cross pot./right lateral Bucky terminal (high-level 5 V DC)
IN-AN	**M111**	Cross potentiometer/right lateral Bucky slider
IN-AN	**M112**	Cross potentiometer/ right lateral Bucky terminal (low-level 0 V DC)
IN-AN	**M113**	Cable Shielding of Cross potentiometer/right lateral Bucky
IN-AN	**M114**	Long pot./right lateral Bucky terminal (high-level 5V DC)
IN-AN	**M115**	Long potentiometer/ right lateral Bucky slider
IN-AN	**M116**	Long potentiometer/right lateral Bucky terminal (low-level 0VDC)
IN-AN	**M117**	Cable Shielding of Long potentiometer/right lateral Bucky

Check the Following Whenever the Potentiometer Operates Irregularly:

- The analogue signal (V DC) from the table Bucky potentiometer sliders must increase with the increase of cassette format. Use a voltmeter to check this condition between contacts M99 (+) and M100 (-) for the Long function and, between M95 (+) and M96 (-) for the Cross function.
- The analogue signal (V DC) from the right lateral Bucky potentiometer sliders must increase with the increase of cassette format. Use a voltmeter to check this condition between contacts M115 (+) and M116 (-) for the Long function and between M111 (+) and, M112 (-) for the Cross function.
- The analogue signal (V DC) from the left lateral Bucky potentiometer sliders must increase with the increase of cassette format. Use a voltmeter to check this condition between contacts M107 (+) and M108 (-) for the Long function and between M103 (+) and M104 (-) for the Cross function.

- The analogue signal (V DC) from the table translator potentiometer slider must increase with the decrease of the SID (as the table rises). Use a voltmeter to check this condition between contacts M91 (+) and M92 (-).
- The analogue signal (V DC) from the stand potentiometer slider must increase with the increase of the SID (as the stand rises).
- Use a voltmeter to check this condition between contacts M87(+) and M88 (-) as the stand rises.

Using the ASR003 board, the operator is able to calibrate the collimator to the components, see ***Fig. Radiology System***.

Fig. Radiology System.

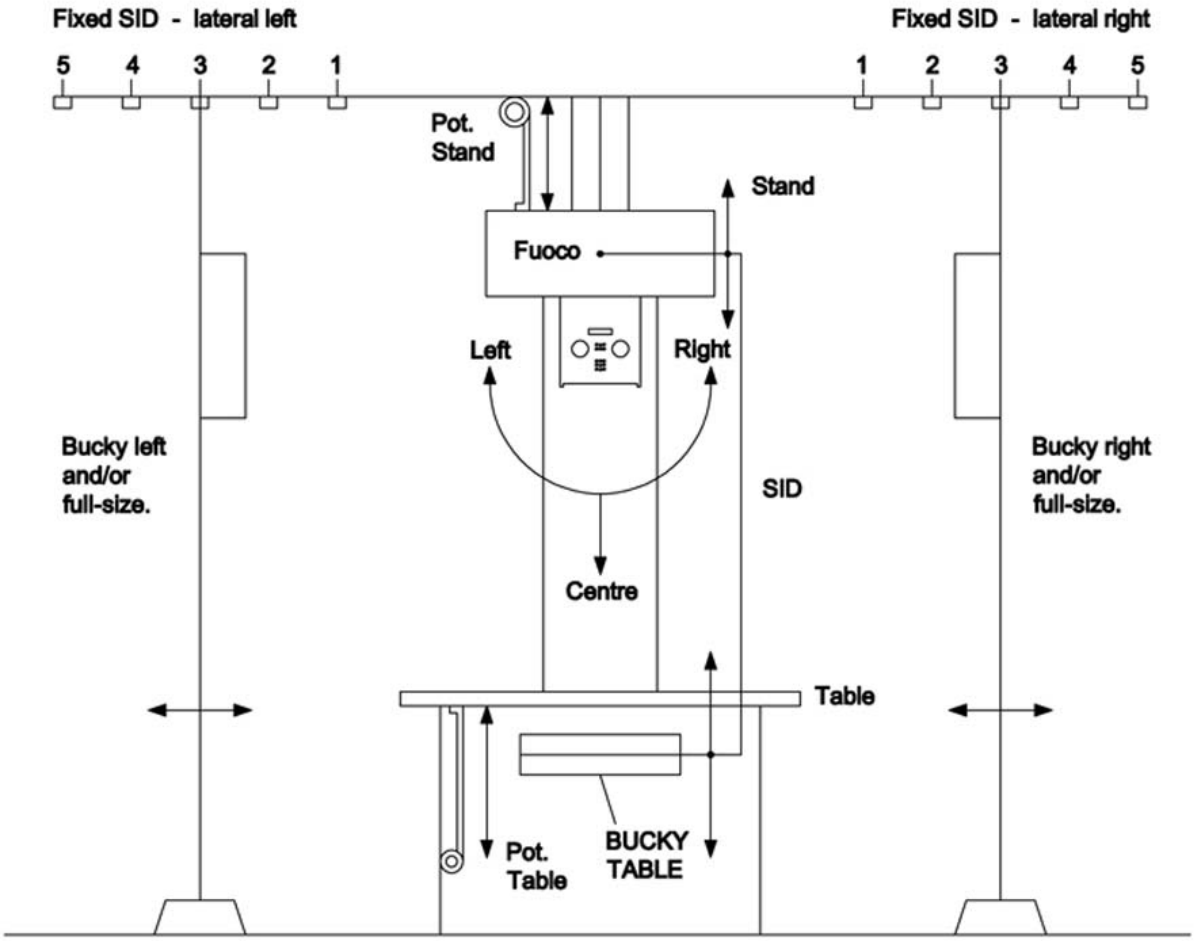

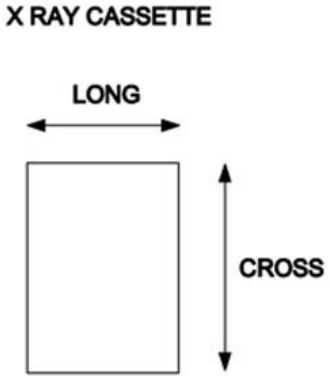

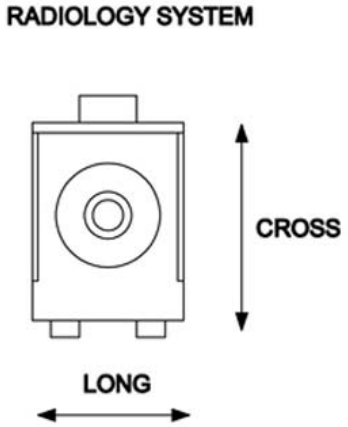

Calibration Start-Up

To start calibration, insert a jumper between pins 2 and 4 of connector J3 on the external board, see ***Fig. 1***. The systems sees the insertion and displays the following:

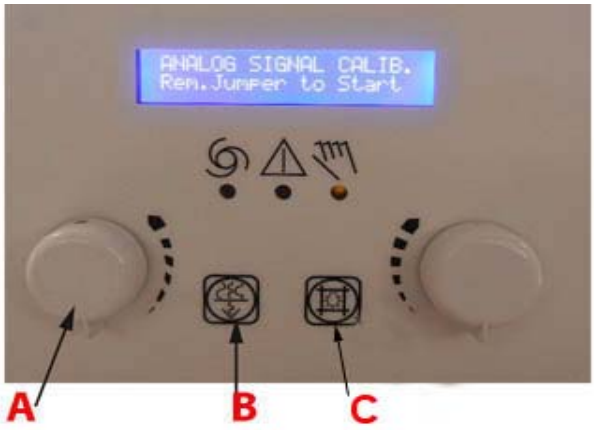

By removing the jumper, the procedure starts with the calibration of the SID potentiometers. To select values on the display during calibration rotate the Encoder Cross **A** to select the value. Filter **B** skips to the next menu without storing the value. Lamp **C** updates the collimator with the new selection.

Fig.

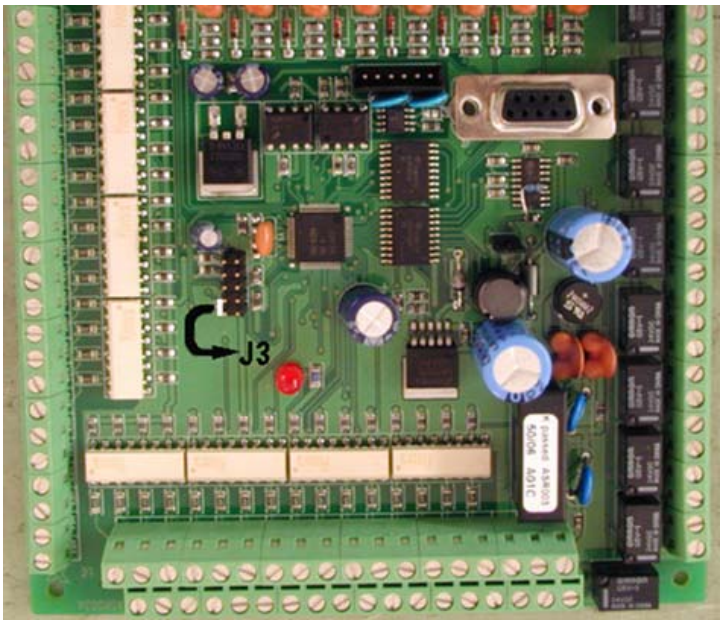

The following section, ***Flow Chart of Calibration Process***, depicts a flow chart of the calibration process including reference numbers (IE: *REF. 1*) succeeded by the section ***Calibration Procedure***, where each reference number is explained in detail.

Flow Chart of Calibration Process

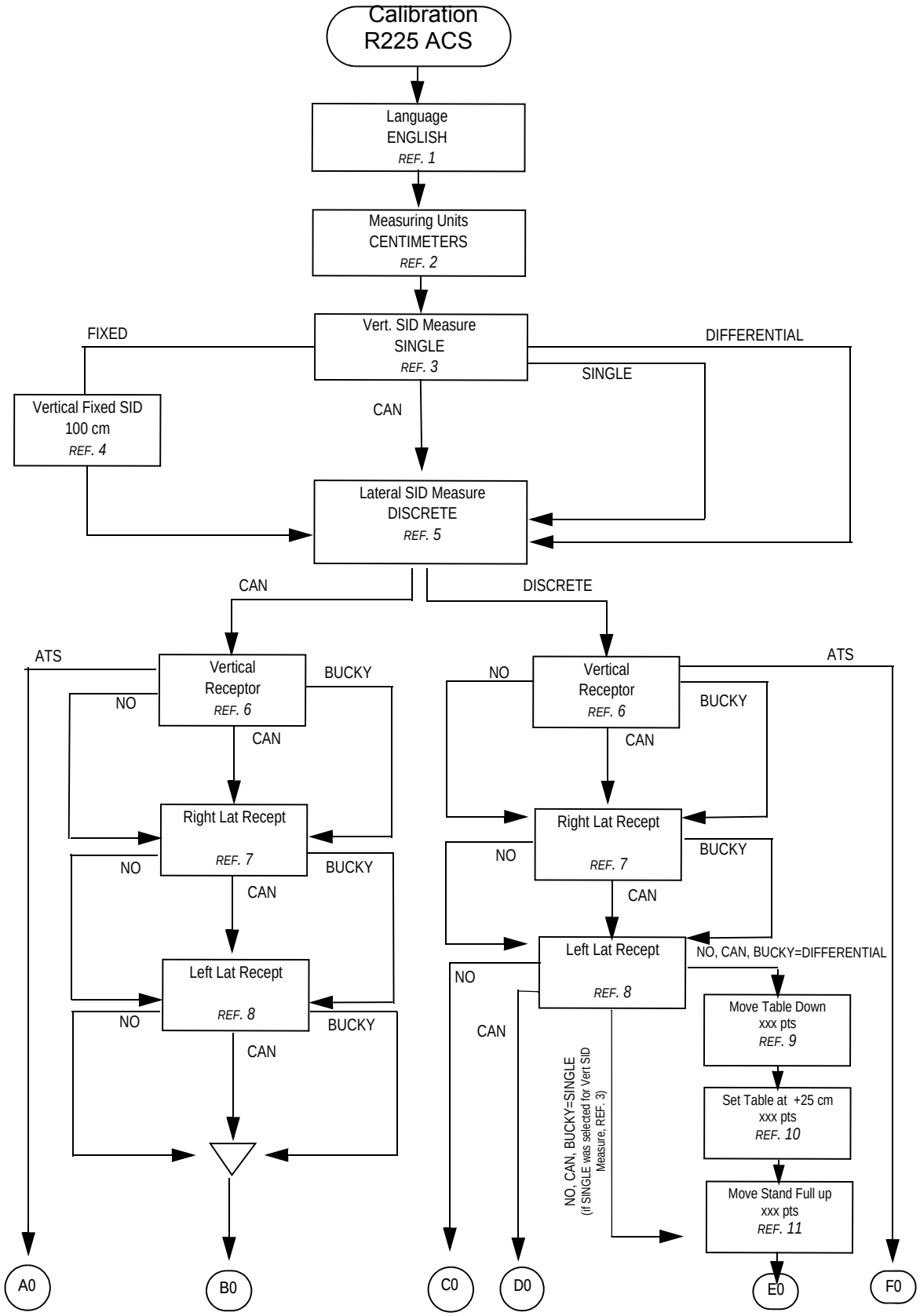

R225 ACS/R225 ACS DHHS - Optional Items

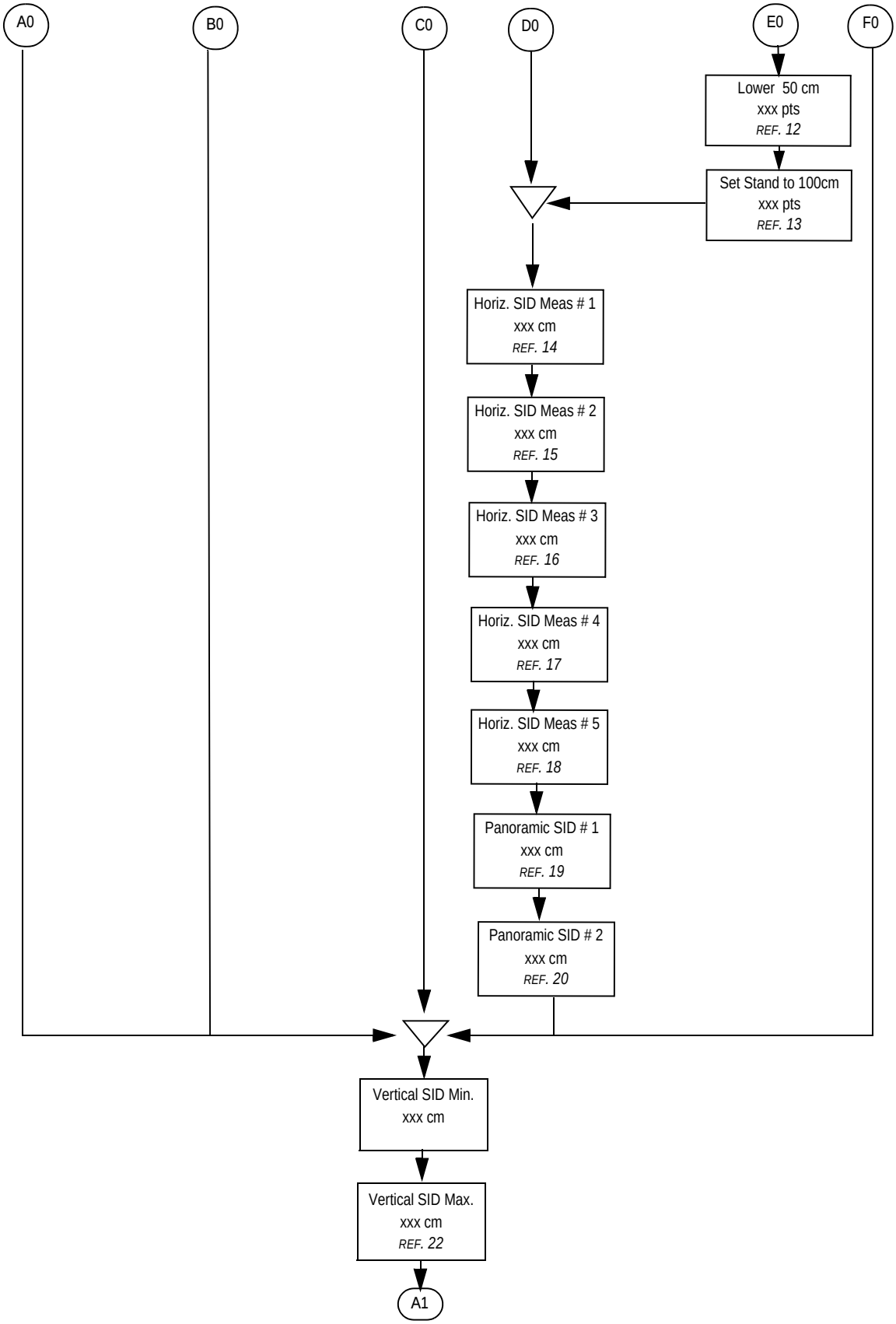

R225 ACS/R225 ACS DHHS - Optional Items

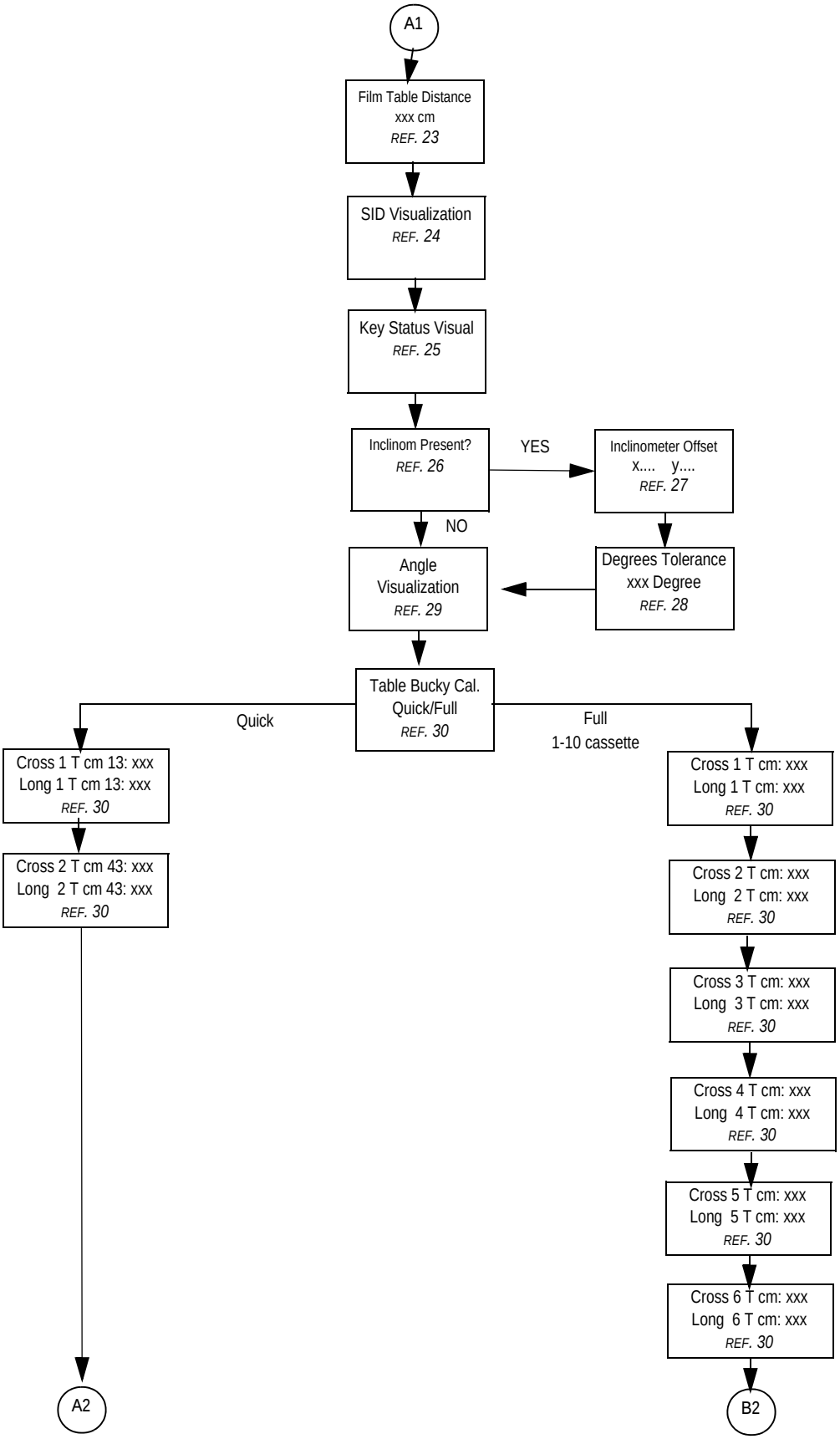
A1
Film Table Distance
xxx cm
REF. 23
SID Visualization
REF. 24
Key Status Visual
REF. 25
Inclinom Present?
REF. 26
YES
Inclinometer Offset
x.... y....
REF. 27
NO
Angle
Visualization
REF. 29
Degrees Tolerance
xxx Degree
REF. 28
Table Bucky Cal.
Quick/Full
REF. 30
Quick
Full
1-10 cassette
Cross 1 T cm 13: xxx
Long 1 T cm 13: xxx
REF. 30
Cross 2 T cm 43: xxx
Long 2 T cm 43: xxx
REF. 30
Cross 1 T cm: xxx
Long 1 T cm: xxx
REF. 30
Cross 2 T cm: xxx
Long 2 T cm: xxx
REF. 30
Cross 3 T cm: xxx
Long 3 T cm: xxx
REF. 30
Cross 4 T cm: xxx
Long 4 T cm: xxx
REF. 30
Cross 5 T cm: xxx
Long 5 T cm: xxx
REF. 30
Cross 6 T cm: xxx
Long 6 T cm: xxx
REF. 30
A2
B2

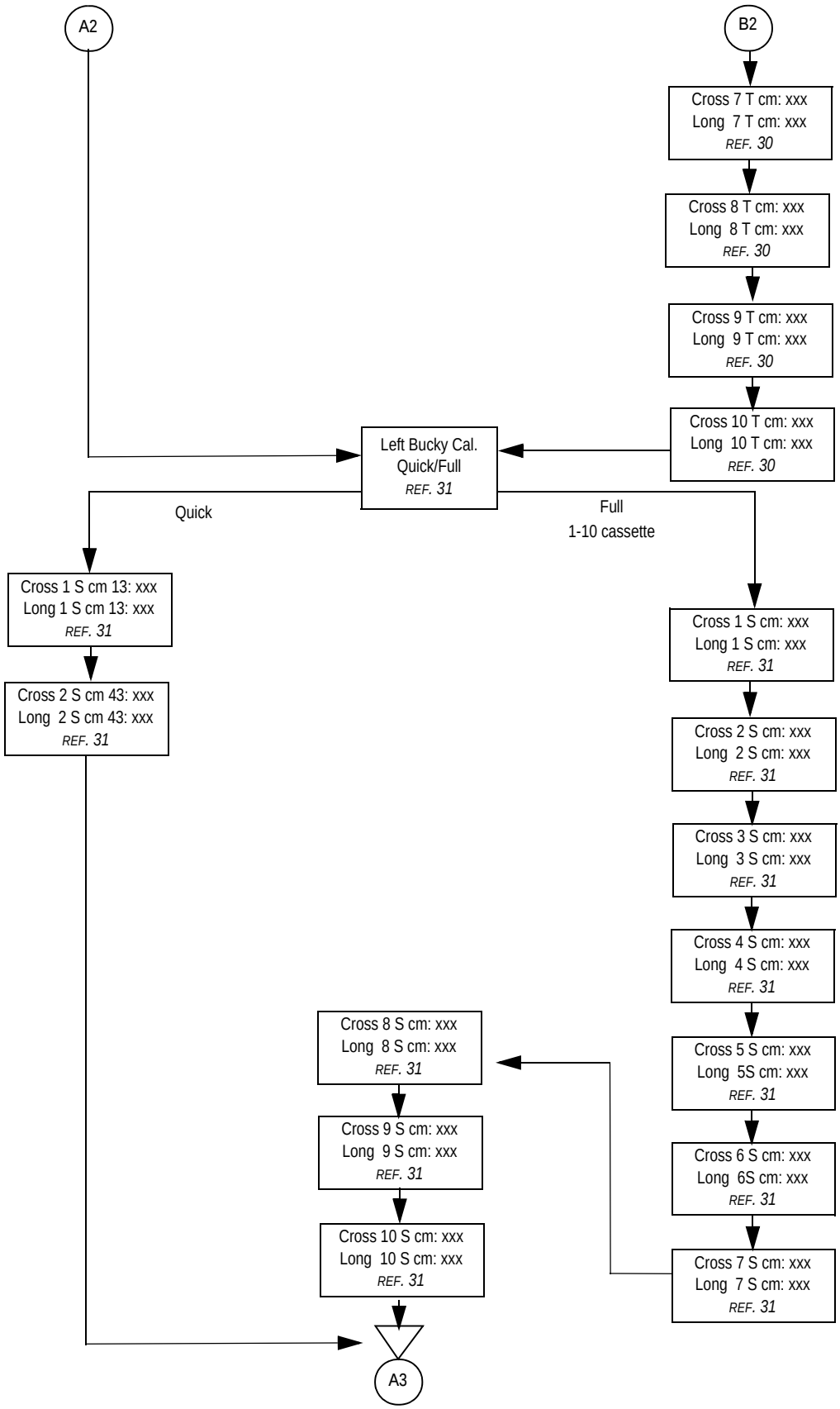

R225 ACS/R225 ACS DHHS - Optional Items

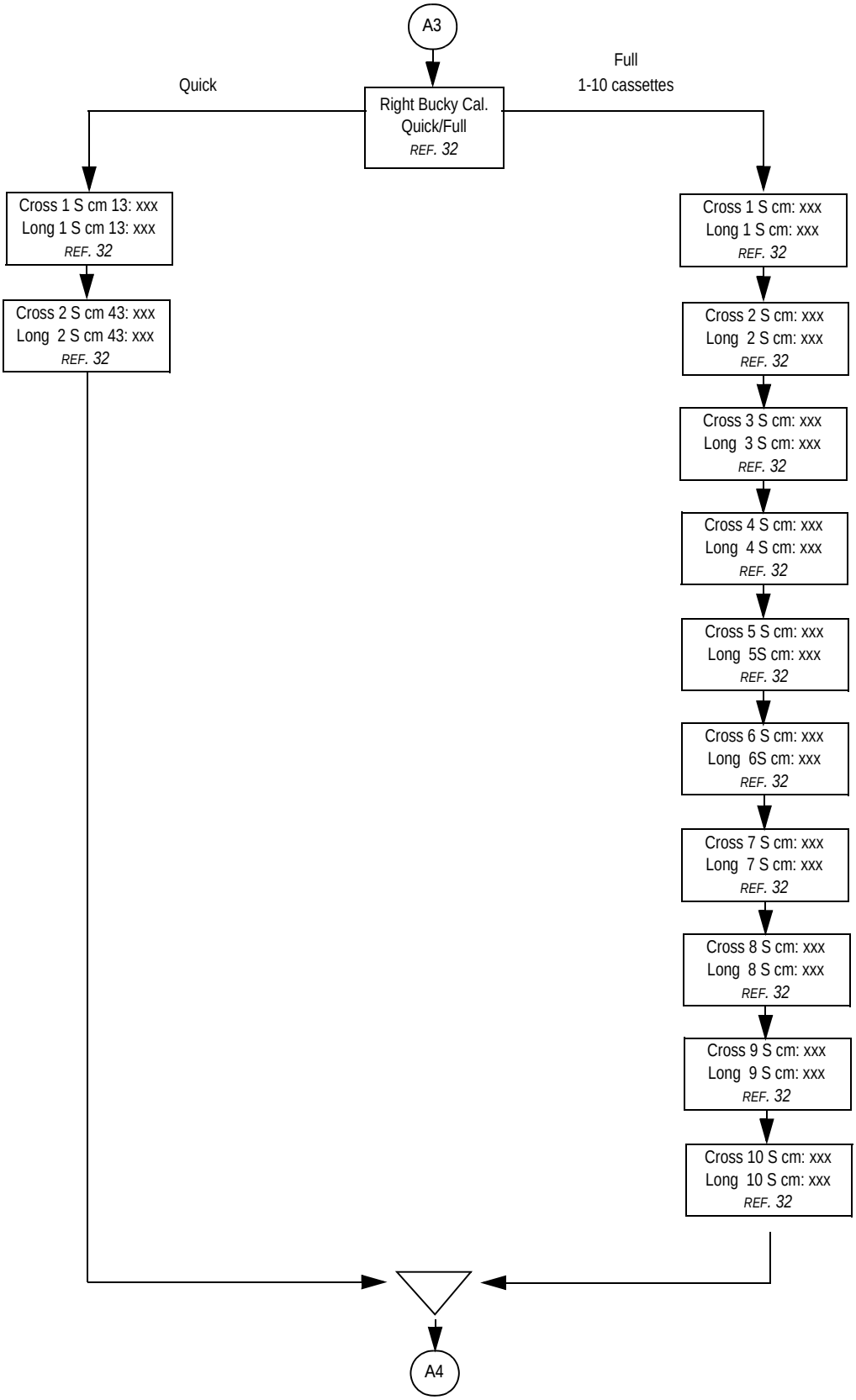

R225 ACS/R225 ACS DHHS - Optional Items

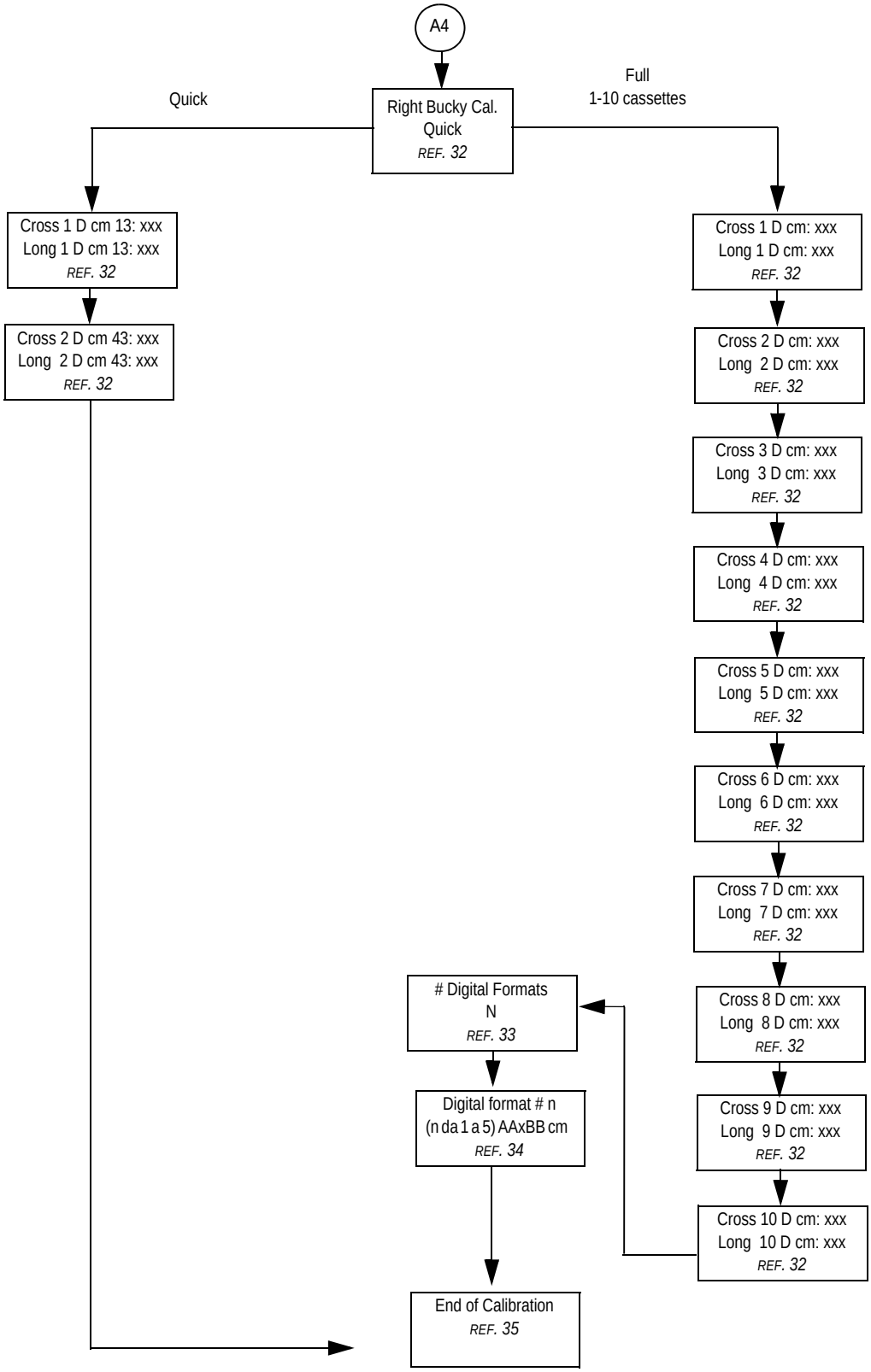

R225 ACS/R225 ACS DHHS - Optional Items

Calibration Procedure

REF. 1 - LANGUAGE SELECTION

The display will read one of the two following messages, depending on the current language setting.

The Encoder Cross **A** will allow to switch from one language to the other.
Press LAMP to confirm the setting; the next selection will be displayed.

Lingua Italiano	*Language English*

REF. 2 - MEASURING UNIT - CENTIMETRES

The Encoder Cross will allow to switch from CENTIMETRES to INCHES.

Measuring Units centimetres

Press LAMP to confirm the setting; the next selection will be displayed:

REF. 3 - VERTICAL SID TYPE

The Encoder Cross will allow to switch between SINGLE SID, DIFFERENTIAL, FIXED and CAN.

- ***SINGLE SID:*** uses one analogue channel (*) for SID calculation.
- ***DIFFERENTIAL:*** uses two analogue inputs (*), one for the table and one for the stand.
- ***FIXED:*** the fixed value is set during calibration.
- ***CAN:*** SID value is transmitted to the collimator via CanBus.

Vertical SID Meas.

Press LAMP to confirm the setting; the next selection will be displayed:
- If FIXED has been selected, vertical SID is set (**see ref. 4**).
- Lateral SID setting in all the other cases (**see ref. 5**).

REF. 4 - FIXED VERTICAL SID VALUE

The Encoder Cross will allow to increase or decrease the SID value from 50 cm min to 255 cm max.

Vertical Fixed SID xxx cm

Press LAMP to confirm the setting; the next selection will be displayed:

REF. 5 - LATERAL SID MEASURE

The Encoder Cross will allow to switch between DISCRETE SID and CAN.

- ***DISCRETE:*** lateral SID is selected via contacts on terminals M65, M66, M68, M70, M71.
- ***CAN:*** Lateral SID is transmitted to the collimator via Can-Bus.

Lateral SID Measure
Discrete/CAN

Press LAMP to confirm the setting; the next selection will be displayed:

REF. 6 - VERTICAL RECEPTOR

The Encoder Cross will allow to switch between BUCKY, CAN, ATS or NO.

- ***NO:*** no receptor is connected.
- ***BUCKY:*** The receptor is a classical Bucky.
- ***CAN:*** formats are CanBus related to the collimator.
- **ATS:** formats are CanBus related to the collimator (ATS detector mode).

Vertical Receptor
Bucky

Press LAMP to confirm the setting; the next selection will be displayed:

REF. 7 - RIGHT LATERAL RECEPTOR

The type of lateral (right) receptor installed with the system must be selected.
The Encoder Cross will allow to switch between BUCKY, CAN, or NO (disabled).

- ***NO:*** no receptor is connected.
- ***BUCKY:*** classical Bucky receptor.
- ***CAN:*** formats are transmitted to the collimator via CanBus.

Right Lat Recept
Bucky

Press LAMP to confirm the setting; the next selection will be displayed:

REF. 8 - LEFT LATERAL RECEPTOR

The type of lateral receptor (left) installed with the system must be selected. The Encoder Cross will allow to switch between BUCKY, CAN, NO.

- ***NO:*** no receptor is connected.
- ***BUCKY:*** classical Bucky receptor.
- ***CAN:*** formats are transmitted to the collimator via CanBus.

Left Lateral Receptor
Bucky

Press LAMP to confirm the setting; depending on the vertical SID value entered.

REF. 9 - CALIBRATION OF VERTICAL SID - TABLE DOWN

Indications displayed for the calibration of the table analogue signal require the table to be lowered:

Move Table Down
xxx pts

The second line of the display shows the digitized voltage value generated by the table potentiometer. The operator will lower the table. When reading is stabilized, press LAMP to complete the setting. Should the operator wish to keep the value previously stored and maintain the last calibration, this setting may be avoided by pressing FILTER.

Both instances will lead to the next measurement.

REF. 10 - CALIBRATION OF VERTICAL SID - RAISE TABLE 25 CM

Set Table at + 25 cm
xxx pts

The operator is required to place the table at the stated height. When the setting is stabilized, press LAMP to confirm the setting.
Should the operator wish to keep the value previously stored and maintain the last calibration, this setting may be avoided by pressing FILTER.

REF. 11 - CALIBRATION OF VERTICAL SID - STAND ALL UP

Move Stand Full Up
xxx pts

The display will provide calibration indications for the stand analogue signal, requiring the stand be raised to a higher position.
The second line of the display shows the digitized voltage value generated by the stand potentiometer.

The operator is required to raise the stand. When the value is stabilized, press LAMP to confirm the setting.
Should the operator wish to keep the value previously stored and maintain the last calibration, this setting may be avoided by pressing FILTER.

REF. 12 - CALIBRATION OF VERTICAL SID - LOWER STAND 50 CM

Lower 50 cm
xxx pts

The operator is required to place the table at the assigned height. When the value is stabilized, press LAMP to complete the setting.

Should the operator wish to keep the value previously stored and maintain the last calibration, this setting may be avoided by pressing FILTER.

REF. 13 - CALIBRATION OF VERTICAL SID - SID AT 100 CM

Set stand to 100cm
xxx pts

The operator is required to set the stand at 1 m (100 cm) from the table top.
When the value is stabilized press LAMP to complete the setting

Should the operator wish to keep the value previously stored and maintain the last calibration, this setting may be avoided by pressing FILTER. At this point, if ***DISCRETE lateral*** SID setting is selected, the lateral SID will need to be entered. Lateral SID is the distance from the focus to the wall Bucky.

Should ***the lateral SID*** value be selected ***via Can***, the minimum vertical SID value will need to be entered.

REF. 14 - SETTING OF SID HORIZONTAL # 1

The display will require the fixed values for the lateral SID to be entered.

Horiz. SID Meas. #1
xxx cm

The Encoder Cross will allow to enter the measurements from 50 min to 255 cm max
Values will be given in inches if this was the initial setting.

Press LAMP to confirm the setting and move forward to the to the next Lateral SID value.

REF. 15 - SETTING OF SID HORIZONTAL # 2

Horiz. SID Meas. #2
xxx cm

The Encoder Cross will allow to enter the measurements from 50 min to 255 cm max.
Press LAMP to confirm the setting.

REF. 16 - SETTING OF SID HORIZONTAL # 3

Horiz. SID Meas. #3
xxx cm

The Encoder Cross will allow to enter the measurements from 50 min to 255 cm max.
Press LAMP to confirm the setting.

REF. 17 - SETTING OF SID HORIZONTAL # 4

Horiz. SID Meas. # 4
xxx cm

The Encoder Cross will allow to enter the measurements from 50 min to 255 cm max.
Press LAMP to confirm the setting.

REF. 18 - SETTING OF SID HORIZONTAL # 5

Horiz. SID Meas. # 5
xxx cm

The Encoder Cross will allow to enter the measurements from 50 min to 255 cm max.
Press LAMP to confirm the setting.

REF. 19 - SETTING OF FULL-SIZE SID # 1

Panoramic SID #1
xxx cm

The Encoder Cross will allow to enter the measurements from 50 min to 255 cm max.
LAMP confirms the selection and passes to the next SID Panoramic value.

REF. 20 - SETTING OF FULL-SIZE SID # 2

Panoramic SID #2
xxx cm

The Encoder Cross will allow to enter the measurements from 50 min to 255 cm max.
LAMP confirms the selection and passes to the next SID Panoramic value.

REF. 21 - CALIBRATION OF VERTICAL SID LIMITS - MINIMUM

The display will show indications of the minimum Vertical SID value accepted by the collimator.

Vertical SID Min.
xxx cm

The Encoder Cross will allow to enter the measurements from 50 cm min to 255 cm max.
Press LAMP to confirm the setting.

REF. 22 - CALIBRATION OF VERTICAL SID LIMITS - MAXIMUM

The display will show indications of the maximum Vertical SID value accepted by the collimator.

Vertical SID Max.
xxx cm

The Encoder Cross will allow to enter the measurements from 50 cm min to 255 cm max.
Press LAMP to confirm the setting; maximum Vertical SID data will be displayed.

REF. 23 - THE NEXT SETTING IS TFD - TABLE TO FILM DISTANCE

This requests the distance from the table top to the image detector. Input this distance.

The following information will be displayed:

Film Table Distance *xxx cm*

The Encoder Cross will allow to enter values from 0 min to 8 cm max (0 to 3.1”).
Press LAMP to confirm the setting.

REF. 24 - SID VISUALISATION

SID Visualization *Yes*

The Encoder Cross activates or deactivates the display of the SID value on the main window.
Press LAMP to confirm the setting.

REF. 25 - KEY STATUS VISUALIZATION

Key Status Visual. *Yes*

The Encoder Cross activates or deactivates the display of the key status on the main window (open or closed padlock).
Press LAMP to confirm the setting.

REF. 26 - INCLINOMETER PRESENT

Inclinom. Present? *YES/NO*

Please Note: When wall Bucky is present Inclinometer must be abilitated.

The Encoder Cross switches from Yes to NO.
Press LAMP to confirm the setting.

REF. 27 - OFFSET INCLINOMETER - SETS 0° POSITION

Inclinometer Offset *X:..... Y:.....*

If the preceding setting is YES, the inclinometer offset may be calibrated.
Press LAMP to confirm the setting.

REF. 28 - DEGREES TOLERANCE

Degrees Tolerance
XX degrees

The encoder Cross (SW1) will allow to enter values from 1 to 15 degrees.
Press LAMP to confirm the setting.

REF. 29 - COLLIMATOR ANGLE VISUALIZATION

Angle Visualization
Yes

The Encoder Cross activates or deactivates the display of the collimator tilt angle in degrees.
Press LAMP to confirm the setting.

Calibrate the vertical Bucky cassettes.

The system will, otherwise, analyze the settings related to the two lateral receptors: if at least one of the two has been programmed as analogue Bucky, the lateral left and/or right cassettes will be calibrated.
If no Bucky was selected, the system will display the end of calibration. Cassette Calibration Information:

The first thing the system requires is to select a quick calibration procedure or a full calibration procedure for all types of cassettes (vertical, lateral left and lateral right).

The differences between the two calibrations are:

- **Quick Cassette Calibration**: the system requires to enter two cassette sizes only (one small and one large).
- **Full Cassette Calibration**: the system requires to enter all possible cassette values (max. 10 Buckys).
  IE: If 3 cassette sizes are stored as 13x18, 24x30 and 30x40 cassettes, the system will also be able to identify cassette sizes such as 13x30, 13x40, 24x18, 24x40, 30x18, 30x30.

REF. 30 - VERTICAL BUCKY CASSETTES, CALIBRATION

Table Bucky Cal.
Quick

The system starts with the calibration type.
The Encoder Cross will allow to switch from Quick to Full calibration.
Press LAMP to confirm the setting.

To cancel the procedure press FILTER. This keeps the last calibration values and moves forward to the next calibration phase. The number of cassette sizes to be processed must be entered in the event of a Full Calibration.

This step is skipped for the Quick Calibration procedure and 2 cassette values will be processed.

Set Number of Table Buckys
With selection of Full Calibration:

Set Number of
Table Buckies xxx

When values are stabilized, confirm the setting by pressing LAMP.

Cross 1 T cm 13: XXX
Long 1 T cm 13: XXX

Cross 2 T cm 43: XXX
Long 2 T cm 43: XXX

At this point the operator may select:

- Increase Cross up to 43 cm (17”) max with push-button OPEN CROSS.
- Decrease Cross to 13 cm (8”) min with push-button CLOSE CROSS up.
- Increase Long up to 43 cm (17”) max using push-button OPEN LONG.
- Decrease Long up to 13 cm (8”) min using push-button CLOSED LONG.

When values are stabilized, confirm the setting by pressing LAMP.

REF. 31 - CALIBRATION OF LEFT LATERAL BUCKY CASSETTE

Left Bucky Cal.
Quick

The Encoder Cross will allow to switch from Quick to Full calibration.
LAMP confirms the selection.

Press FILTER to cancel the procedure. This keeps last calibration made and moves on to the next phase.

Set Number of Left Side Buckys
With selection of Full Calibration:

Set Number of
Left Side Buckie xxx

When values are stabilized, confirm the setting by pressing LAMP

Cross 1 S cm 13: XXX
Long 1 S cm 13: XXX

Cross 2 S cm 43: XXX
Long 2 S cm 43: XXX

The Encoder Cross will allow to increase or decrease the cassette number from 1 min to 10 max.

At this point the operator may:

- Increase Cross up to 43 cm(17”) max with push-button OPEN CROSS.
- Decrease Cross to 13 cm (8”) min with push-button CLOSE CROSS up.
- Increase Long up to 43 cm (17”) max using push-button OPEN LONG.
- Decrease Long up to 13 cm (8”) min using push-button CLOSED LONG.

When values are stabilized, confirm the setting by pressing LAMP.

REF. 32 - CALIBRATION OF RIGHT LATERAL BUCKY CASSETTE

Right Bucky Cal.
Quick

The Encoder Cross will allow to switch from Quick to Full calibration.
LAMP confirms the selection.
Press FILTER to cancel the procedure. This keeps last calibration made and moves on to the next phase.

Set Number of Right Side Buckys
With selection of Full Calibration:

Set Number of
Right S. Buckies xxx

When values are stabilized, confirm the setting by pressing LAMP

The number of cassette sizes to be processed must be entered in the event of a Full Calibration.

Cross 1 D cm 13: XXX
Long 1 D cm 13: XXX

Cross 2 D cm 43: XXX
Long 2 D cm 43: XXX

The Encoder Cross will allow to increase or decrease the cassette number from 1 min to 10 max.

LAMP confirms the selection.
Press FILTER to cancel the procedure. This keeps last calibration made and moves on to the next phase.
Both types of calibration procedures will require the processing of signals from Bucky potentiometers.
At this point the operator may:

- Increase Cross up to 43 cm (17”) max with push-button OPEN CROSS.
- Decrease Cross to 13 cm (8”) min with push-button CLOSE CROSS up.
- Increase Long up to 43 cm 17”) max using push-button OPEN LONG.
- Decrease Long up to 13 cm (8”) min using push-button CLOSED LONG.

When the value is stabilized, confirm the setting by pressing LAMP.
At this point the system checks the number of the stored cassettes and, if necessary, proceeds a new acquisition phase until the maximum number is reached.

At this point calibration is completed.

REF. 33 - NUMBER OF DIGITAL INPUTS?

Digital Inputs? N

It is possible to connect, to the external board ASR003, the inputs (max 5) that allow to enter the fixed formats in the automatic mode.

REF. 34 - DIGITAL FORMAT # N (N FROM 1 TO 5)

Digital format # N AA X BB cm

If a format other than 0 has been set (where AA is the Cross format, BB the Long, cm or inches as the setting may be). Cross Encode changes the Cross format and the same applies to the Long encoder for the Long format.

Press Lamp to confirm and pass to the following menu.

REF. 35 - SAVING CALIBRATION DATA

The system informs the operator that calibration has terminated.

End of Calibration

The operator may:

a) Disconnect the power supply.
b) Power up the system.

RO 310 Iris

Iris device providing round field collimation with automatic setting of the selected field. This device is positioned roughly mid-way within the collimator housing. The field is defined by lead iris-type shutters and is externally tangent to the maximum square field size.

Shutter movements are motorized with stepper motors; shutter positioning is potentiometer controlled.

The round-field size may be set via CanBus or by analogue control via the external board ASR003 (RO 308); its size may be reduced remotely via the two push-buttons on the collimator front panel.

Round-field values vary from 10 cm (4”) to 60 cm (24”).

Can-DC-Step Electrical Connection

CONNECTORS

J2 - Supply	1. 0-25 V AC or +34 V DC 2. 0-25 V AC or 0 V DC 3. parallel to n.1 4. parallel to n.2

J6 - Home Sensor Input	1. Close Iris 2. Gnd push-button 3. -Emitter fork 4. +Emitter fork 5. Home input signal 6. Gnd
J5 - Motor	1. Motor B- 2. Motor B+ 3. Motor A+ 4. Motor A-
J4 - Motor	1. +5 V 2. Busy 3. CLK 4. Rx 5. CE 6. nc 7. Gnd 8. Reset 9. Cnvss 10.Tx
J1, J3 - CanBus	1. Can H 2. Gnd 3. Can L

Jumpers

JP1, JP2 - Termination CanBus	1-2 Terminated 2-3 Not Terminated Termination jumpers: 2 and not 1. This is because a Bias 2.5 V tension is also supplied including a small circuit to reduce EMC.
JP4 - Input Push-Button	1 Open Iris 2 Gnd
JP3 - DC Supply (optional)	Short circuit JP3 if the board Gnd is required to be at the same potential of 0 V of the DC supply.
JP5 - Input Type	OFF - Input potentiometer input ON - Photocell input with pull-up

CanBus Controls

ID	Type	dlc	1	2	3	4	5	6	7	8	Note
xx0h	Remote	8	xx	xx	xx	xx	xx	xx	xx	xx	Read Release
xx3h	Remote	8	xx	xx	xx	xx	xx	xx	xx	xx	Read S/N
xxBh	Remote	7	xx	Fmin.H	Fmin.L	Fmax.H	Fmax.L	Ramp.H	Ramp.L		Read Dati Speed
xx1h	Out	8	Pos.HH	Pos.HL	Pos.LH	Pos.LL	Stato	A/D.H	A/D.L	01h	Stato
xx1h	Out	8	Num	Adc.H	Adc.L	Step.H	Step.L			02h	Invio Valore Taratura
xx2h	In	3	00h	Pot.H	Pot.L						Home
xx2h	In	7	01h	Ass.HH	Ass.HL	Ass.LH	Ass.LL	Max.H	Max.L		Assoluto
xx2h	In	7	02h	Rel.HH	Rel.HL	Rel.LH	Rel.LL	Max.H	Max.L		Relativo
xx2h	In	1	03h								Rilascia Motore
xx2h	In	2	04h	Close	Open						Tasti Remoti
xx2h	In	5	FEh	Pos.HH	Pos.HL	Pos.LH	Pos.LL				Set Posizione
xx2h	In	1	FFh								Stop
xx4h	In	5	M	K	T	D	L				Drive Mode
xx5h	In	8	M	Fmin.H	Fmin.L	Fmax.H	Fmax.L	Ramp.H	Ramp.L	Save	Drive Speed
xx6h	In	2	Opz	Save							Opzioni
xxCh		8	xx	xx	xx	xx	xx	xx	xx	xx	Imposta_S/N
xxDh	In	8	00h			Curr.H	Curr.L	CW	Idle	PCurr	Set Motore
xxDh	In	3	01h	Time.H	Time.L						Set Time Tx Stato
xxDh	In	4	02h	PM.H	PM.L	Flag					Set Passi Max
xxDh	In	2	03h	Tar							Set Taratura
xxDh	In	8	04h	Fmin.H	Fmin.L	Fmax.H	Fmax.L	Ramp.H	Ramp.L	Save	Drive Speed per Tasti

ID	Type	dlc	1	2	3	4	5	6	7	8	Note
xxDh	In	8	05h	Num	Adc.H	Adc.L	Step.H	Step.L			Set dei valori di Taratura
xxDh	In	8	06h	Num							Read di valori di Taratura

WARNING:
THIS IS PROVIDED AS AN AID TO THE END USER. RALCO IS NOT LIABLE FOR ANY DAMAGES RESULTING FROM THE ALTERING OF PRESET FACTORY CONFIGURATIONS.

ADJUSTMENTS HAVE BEEN PRESET AT THE FACTORY PRIOR TO SHIPMENT OF THE COLLIMATOR. SHOULD ANY PROBLEM ARISE REQUIRING THE NEED TO RECALIBRATE, PLEASE CONTACT RALCO FOR ASSISTANCE BEFORE PROCEEDING WITH THE ADJUSTMENT.

Adjustments

MOTOR

- Disconnect supply
- Remove the cover, see Chapter- **COVER REMOVAL**
- Remove the Can DC Step board by unscrewing the 4 screws **D**, see ***Fig.1***
- Remove the lateral partitions, see ***Fig. 2***
- Unscrew the 4 screws **F** from the front partition and remove the filter group, see ***Fig.3***
- Unscrew the 4 screws **G** on the iris support plate, see ***Fig. 4***
- Remove the iris support plate, see ***Fig. 5***
- Loosen the 2 screws **A** on the motor support and adjust play between the gear and the iris, see ***Fig.6***
- Tighten the 2 screws **A** and remount in reverse order

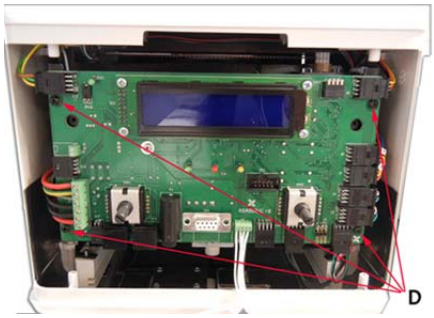

Fig. 1

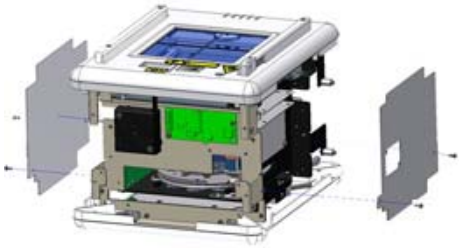

Fig. 2

POTENTIOMETER

- Disconnect supply
- Remove the cover, see Chapter- **COVER REMOVAL**
- Remove the RSR008 board by unscrewing the 4 screws **D**, see ***Fig.1***
- Remove the lateral partitions, see ***Fig. 2***

- Unscrew the 4 screws **F** from the front partition and remove the filter group, see ***Fig.3***
- Unscrew the 4 screws **G** on the iris support plate, see ***Fig.4***
- Remove the iris support plate, see ***Fig.5***
- Loosen the 2 screws **B** on the motor support and adjust play between the gear and the iris, see ***Fig.6***
- Tighten the 2 screws **B** and remount in reverse order

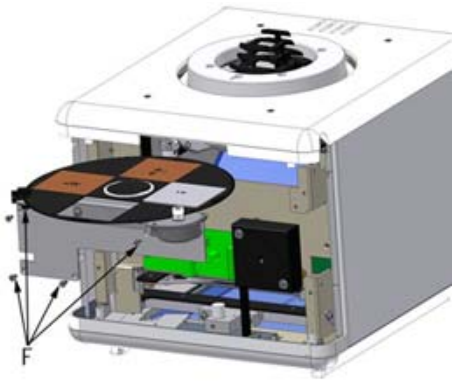

Fig. 3

SQUARE-FIELD/ROUND-FIELD ALIGNMENT

Alignment of the round/square fields is necessary, if one of the square-field shutters is noticeable in the round field.

- Disconnect supply
- Remove the cover, see Chapter- **COVER REMOVAL**
- Remove the RSR008 board by unscrewing the 4 screws **D**, see ***Fig.1***
- Remove the lateral partitions, see ***Fig. 2***
- Unscrew the 4 screws **F** from the front partition and remove the filter group, see ***Fig.3***
- Loosen the 4 screws **G** on the iris support plate, see ***Fig.4***
- Using the light-field, open the iris to 9”
- Set the square field shutters to touch the edge of the round field
- If one of the shutters extends into the round-field, move the iris until it is aligned with the edges of the square-field shutters
- Tighten the 4 screws **G** at the base of the iris
- Remount the cover, see Chapter- **COVER REMOVAL**

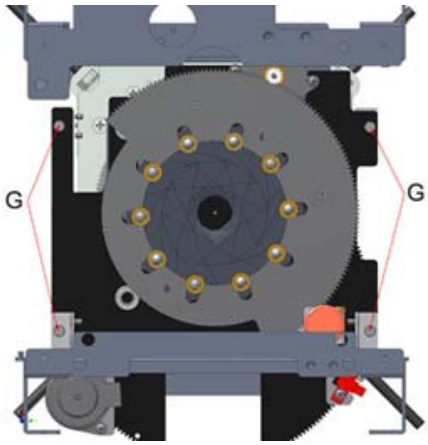

Fig. 4

Substitutions

MOTOR

- Disconnect supply
- Remove the cover, see Chapter- **COVER REMOVAL**
- Remove the RSR008 board by unscrewing the 4 screws **D**, see ***Fig.1***
- Remove the lateral partitions, see ***Fig. 2***
- Unscrew the 4 screws **F** from the front partition and remove the filter group, see ***Fig.3***
- Unscrew the 4 screws **G** on the iris support plate, see ***Fig. 4***
- Remove the iris support plate, see ***Fig. 5***
- Unscrew the 2 screws **A** on the motor support
- Substitute the motor for an identical part and remount in reverse order

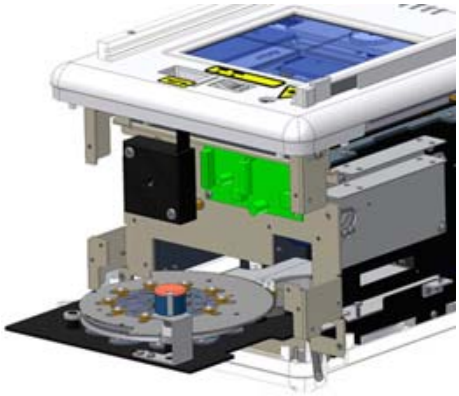
Fig. 5

POTENTIOMETER

- Disconnect supply
- Remove the cover, see Chapter- **COVER REMOVAL**
- Remove the RSR008 board by unscrewing the 4 screws **D**, see ***Fig.1***
- Disconnect the connector from the Can DC Step board

- Remove the lateral partitions, see ***Fig. 2***
- Unscrew the 4 screws **F** from the front partition and remove the filter group, see ***Fig.3***
- Unscrew the 4 screws **G** on the iris support plate, see ***Fig. 4***
- Remove the iris support plate, see ***Fig. 5***
- Unscrew the 2 screws **B** on the motor support
- Substitute the motor for an identical part and remount in revers order.

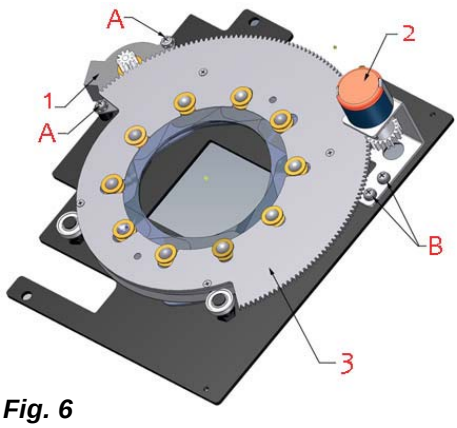

Fig. 6

1- Step Motor, 2 - Potentiometer, 3 - Iris,
A - Step Motor Adjustment, B - Potentiometer Adjustment

RO 314 Video Camera

Analogue, color, video camera mounted on the lower part of the collimator for remote patient monitoring.

Substitution of the Video Camera

- Remove the rear cover by unscrewing the four screws, see Chapter - **COVER REMOVAL**.
- Remove the lateral cover by lifting it off from the two spacers, see Chapter - **COVER REMOVAL.**
- Turn the collimator over and unscrew the four screws placed on the rails. Remove the lower cover, see Chapter - **COVER REMOVAL**.
- Remove the video camera support by unscrewing the two **A** screws, see ***Fig. 1.***
- Disconnect the connector from the video camera and substitute the whole support with the video, see ***Fig. 2.***
- To adjust the video camera loosen the two **B** screws, see ***Fig. 3.***
- The first adjustment focuses the video camera, the second adjustment points it. Once the adjustment is finished tighten the two **B** screws and remount the cover, see ***Fig. 4***.

Fig.

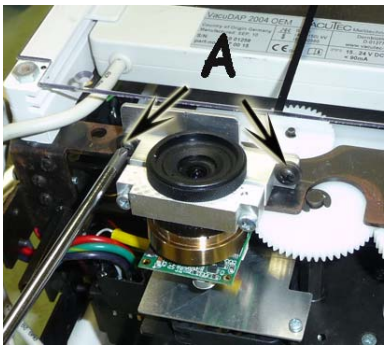

Fig.

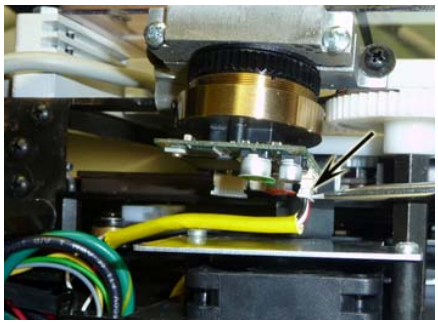

Fig.

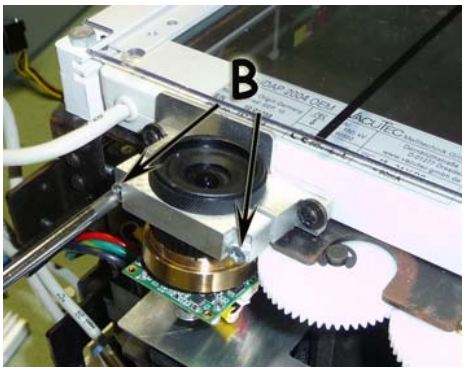

Fig.

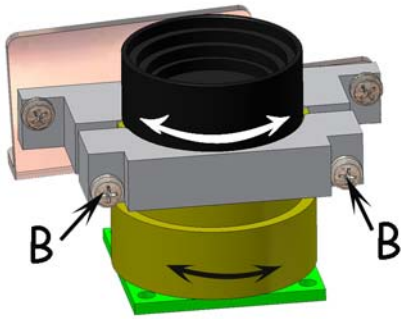

RO 320 Rotation Device

Collimator rotation, ±45°, with potentiometer to control collimator movement.

Rotation Adjustment

MOTOR

The motor for the collimator rotation is assembled inside the collimator body and is calibrated inhouse. If the gear with the cogwheel on the mounting flange is not perfect, proceed as follows:

- Remove the plate to access the adjustment point, see Chapter- **COVER REMOVAL**.
- Loosen the two screws **A**, move the motor toward the collimator and check that play between two gears is minimum.
- Tighten the two screws **A**, see ***Fig. 1***.
- Tighten the 2 screws **C** on the gear if the motor is running while the collimator does not move or loosen the 2 screws **C** if the gear does not run at the end of stroke.

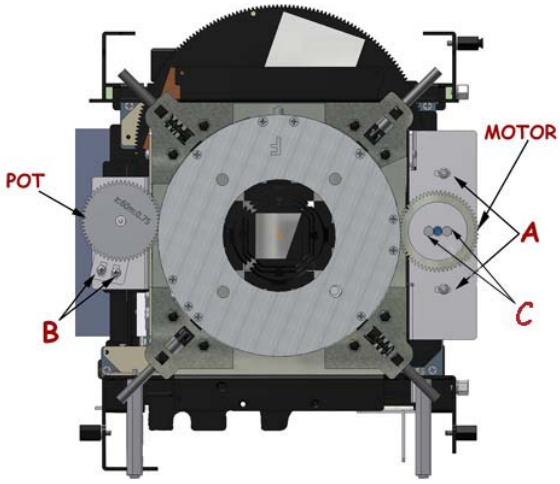

Fig. 1

POTENTIOMETERS

The potentiometer that controls collimator position is assembled inside the collimator body and is calibrated inhouse. If the gear with the cogwheel on the mounting flange is not perfect, proceed as follows:

- Loosen the two screws **B** move the potentiometer toward the collimator and check that play between the two gears is minimum.
- Tighten the two screws **B**, see ***Fig. 2***.

Motorized Rotation Substitution

MOTOR

- Disconnect supply to the collimator.
- Remove the plate to access the adjustment point, see Chapter - **COVER REMOVAL**.
- Loosen the two screws **D** and remove the part. The friction support is glued to the motor shaft; this means that the motor, friction and support need to be substituted.
- Substitute with an identical item.
- Tighten the screws **D** and adjust play between gears, see Chapter - **ADJUSTMENTS**.
- Fasten the two screws **D**, see ***Fig. 3***.

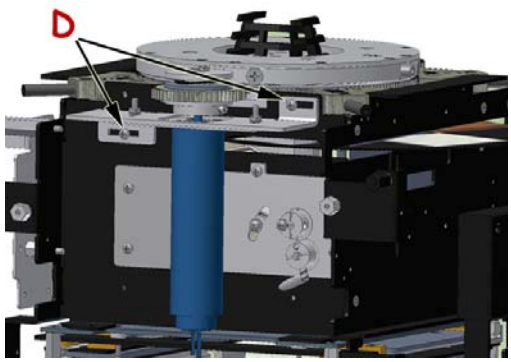

Fig. 2

POTENTIOMETER

- Disconnect supply.
- Remove the plate to access the adjustment point, see Chapter - **COVER REMOVAL.**
- Unsolder electrical wires and mark polarity.
- Unscrew the two screws **E.**
- Remove the gear from **F.**
- Substitute with an identical item.
- Remount the gear.
- Remount the support and adjust play between gears, see Chapter - **ADJUSTMENTS**.
- Fasten screws **E**, see ***Fig. 3***.

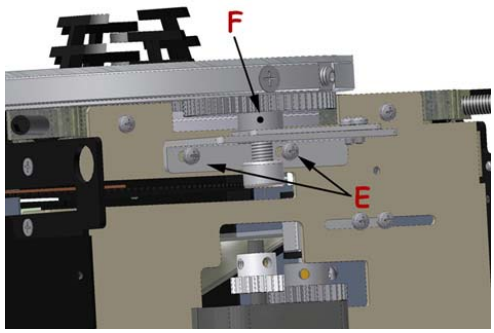

Fig. 3

CALIBRATION OF POTENTIOMETER

- Loosen the potentiometer shaft fixing Allen screws.
- Position the collimator at 0° (central position).
- Manually rotate the potentiometer shaft from min. to max. to check the maximum value displayed in position A/D:yyyy.
- Rotate the potentiometer to read the maximum value; divide the value by 2.
- Fasten the potentiometer Allen screws.

Can-DC-Step Electrical Connection

CONNECTORS

J2 - Supply	4. 0-25 V AC or +34 V DC 5. 0-25 V AC or 0 V DC 6. parallel to n.1 7. parallel to n.2

J6 - Home Sensor Input	1. Close Iris 2. Gnd push-button 3. -Emitter fork 4. +Emitter fork 5. Home input signal 6. Gnd
J5 - Motor	1. Motor B- 2. Motor B+ 3. Motor A+ 4. Motor A-
J4 - Motor	1. +5 V 2. Busy 3. CLK 4. Rx 5. CE 6. nc 7. Gnd 8. Reset 9. Cnvss 10.Tx
J1, J3 - CanBus	1. Can H 2. Gnd 3. Can L

Jumpers

JP1, JP2 - Termination CanBus	1-2 Terminated 2-3 Not Terminated Termination jumpers: 2 and not 1. This is because a Bias 2.5 V tension is also supplied including a small circuit to reduce EMC.
JP4 - Input Push-Button	1 Open Iris 2 Gnd
JP3 - DC Supply (optional)	Short circuit JP3 if the board Gnd is required to be at the same potential of 0 V of the DC supply.
JP5 - Input Type	OFF - Input potentiometer input ON - Photocell input with pull-up

CanBus Controls

xx0h	Remote	8	xx	xx	xx	xx	xx	xx	xx	xx	Read Release
xx3h	Remote	8	xx	xx	xx	xx	xx	xx	xx	xx	Read S/N
xxBh	Remote	7	xx	Pmin.H	Pmin.L	Pmax.H	Pmax.L	Ramp.H	Ramp.L		Read Dati Speed
xx1h	Out	7	Pos.HH	Pos.HL	Pos.LH	Pos.LL	Stato	A/D.H	A/D.L		Stato
xx2h	In	5	01h	Ass.HH	Ass.HL	Ass.LH	Ass.LL				Assoluto
xx2h	In	5	02h	Rel.HH	Rel.HL	Rel.LH	Rel.LL				Relativo
xx2h	In	4	05h	Pwm	Time.H	Timer.L					Muove_vs_Min (debug)
xx2h	In	4	06h	Pwm	Time.H	Timer.L					Muove_vs_Min (debug)
xx2h	In	1	FFh								Stop
xx4h	In	3	01h	SwMin	SwMax						Switch_Remoti
xx5h	In	8	M	Pmin.H	Pmin.L	Pmax.H	Pmax.L				Drive_Speed
xx6h	In	1	Opz								Opzioni
xxAh	In	5	01h	Pos.HH	Pos.HL	Pos.LH	Pos.LL				Set_Pos_Minima
xxAh	In	5	02h	Pos.HH	Pos.HL	Pos.LH	Pos.LL				Set_Pos_Media
xxAh	In	5	03h	Pos.HH	Pos.HL	Pos.LH	Pos.LL				Set_Pos_Massima
xxAh	In	5	04h	Vel.H	Vel.L	Brk.H	Brk.L				Set_Vel_&_Brake
xxAh	In	1	05h								Set_Pot_Min
xxAh	In	1	06h								Set_Pot_Max
xxCh		8	xx	xx	xx	xx	xx	xx	xx	xx	Imposta_S/N
xxDh	In	3	01h	Time.H	Time.L						Set_Time_Tx_Stato
xxFh	In	5	01h	Id.H	Id.L	Sp.H	Sp.L				Set ID e speed
xxFh	In	2	FFh	Sys							Set sistema

Status

Status message is sent repeatedly in two ways:
If the motor is in motion the message is sent each number of ms defined by **Set Time Tx.**

If the motor is stopped the message is sent once by the second.
Pos: position in degrees *10 (degrees are expressed in decimal system).

Status

bit 7	bit 6	bit 5	bit 4	bit 3	bit2	bit 1	bit 0
Home	-	-	-	Alarm	Protection		Triggered

Home: = 1 if the collimator is in min. position.
Alarm: Alarm is ON if the movement control was performed but the potentiometer does not move. The alarm is not enabled in manual movements: Move forward and Move backward.
A/D: A/D converter value read by the potentiometer.

Absolute

Moves motor to specified position.

Relative

Moves motor by number of given steps (also negative).

Muove_vs_Min control moves the collimator toward min. position (es. -45°).

Muove_vs_Max control moves the collimator toward max. position (es. +45°).

Stop

Stops the motor.

Switch_Remote

Repeats the switch remote status.
SwMin: rotates the collimator toward min. position (0=not pressed, 0xFF= pressed).
SwMax: rotates the collimator toward max. position (0=not pressed, 0xFF=pressed).

Drive_Speed
Specifies motor working speed.
M- settings, if bit at 1 the inserted field is valid.

bit 7	bit 6	bit 5	bit 4	bit 3	bit2	bit 1	bit 0
-	-	-	-	CW	Rampa	Pmax	Pmin

Pmin: PWM min. to use at motor start-up (0-255).
Pmax. max. PWM applicable (0-255).
Ramp: in ms, time used to switch Pmin to Pmax and vice versa during acceleration and deceleration. (max 1000 ms).
CW: (0/1) inverts direction clockwise and counterclockwise.

Options

Sets operation of LED and offset:
Options
:

bit 7	bit 6	bit 5	bit 4	bit 3	bit2	bit 1	bit 0
-	-	-	-	Offset	LED1	LED0	Dis_switch

Offset – if at 1 output messages are shifted by 0x80.

LED1,0 – Defines LED function.
00 – Home sensor status.
Off with flash per second - NOT Home.
ON with flash per second - Home.
01 – Constant flash 1 Hz.
10 - ON motor movement – OFF motor idle.
11 – Incoming message via CanBus.

Dis_switch 0= enables local keys 1- disables local keys.

Set_Pos_Minima
Set_Pos_Media
Set_Pos_Massima

These controls are used to set both potentiometer in correct position and relative degrees.

When control is sent the cpu reads the potentiometer value and stores into parameters together with received degrees by the same control.

Pos: the sent degrees correspond to current position. Degrees to be sent are multiplied by 10, considering tenths of a degree.
ie. to send +45°, +450 is dispatched, in Hex 0x000001C2
ie. to send -45°, -450 is dispatched, in Hex 0xFFFFFE3E

Set_Vel_&_Brake

Set the rotation speed in degrees (always multiplied by 10) on the highest motor power.
Set also the motor braking time.
To stop motor invert the rotation for specified time.
Spe: Speed in °/sec. x 10.
Brk: braking time in ms.

Set_Pot_Max

Set max potentiometer excursion (stores the converter A/D value read at the message sending).

S/N setting

Set the board S/N.

Status Time Tx Stato

Set transmission time Tx Status.
Time: in ms - time of Status re-transmission with motor position.

RO 329 Proximity Sensor

Board RSR008 is ready to display readings of an infrared photosensor. This photosensor is to be supplied at 12 V DC and is designed to detect objects in the field up to 30 cm.

Connection

The 12 V supply is to be drawn from connector J10; the output signal is to be connected to pin 2 of connector J12. A resistor, 10 Kohm 1/4 W, is to be mounted between pins 2 and 3 on connector J12. See Fig. 1 for the wiring diagram of the sensor.

Calibration

The two switches on the sensor front serve as reference

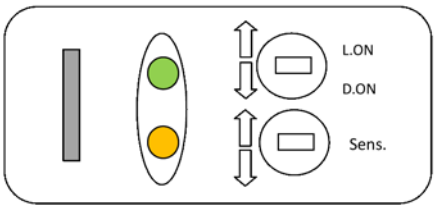

Sensor Calibration

- Rotate the Light/Dark switch to LIGHT ON to activate the sensor when the object is in measuring range.
- Set the object at the required detection distance and adjustment the sensitivity switch by increasing the potentiometer until the orange LED light is lit.

- Remove the object and set sensitivity half-way between the detected point and maximum potentiometer value.

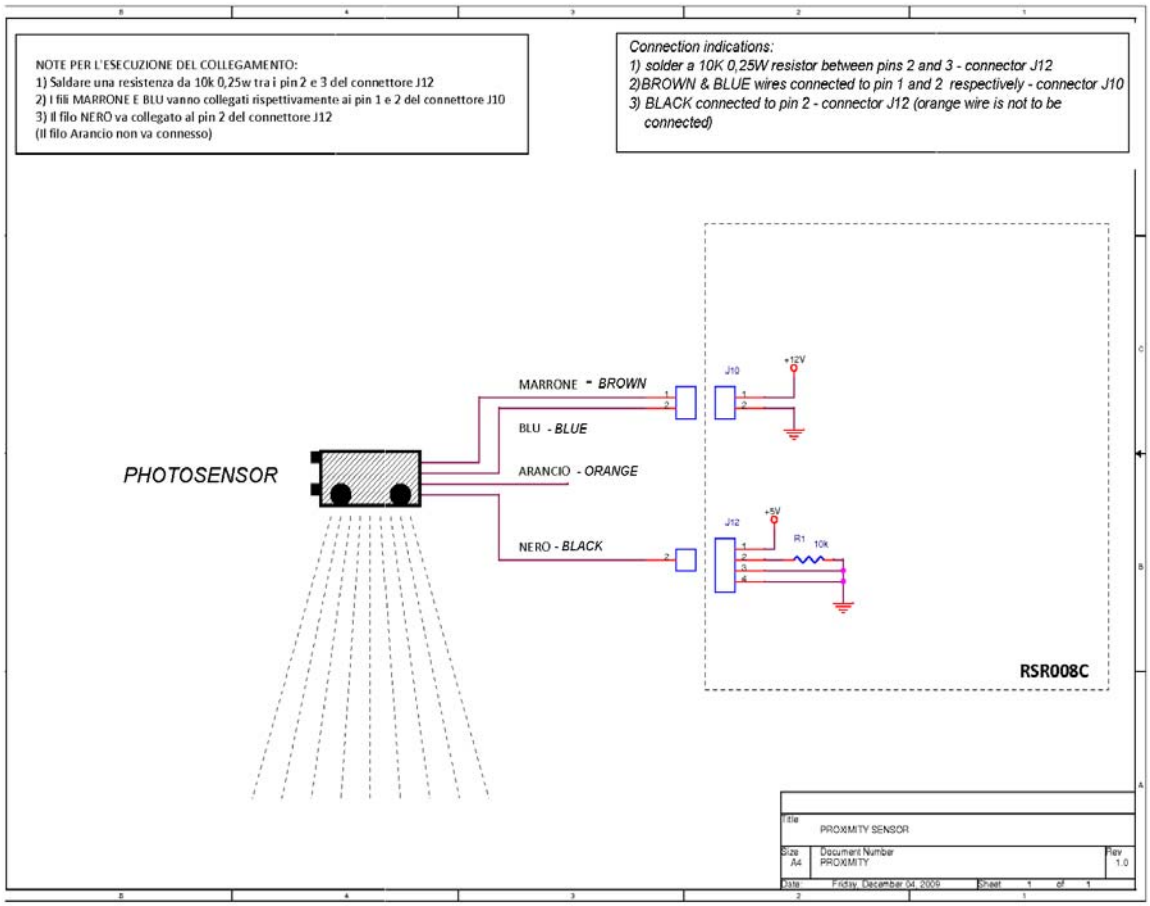

RO 330 Connection Cable

Connecting cable extension; Longer cable is provided for your system.

RO 337 Camera Mounting Support

Mechanical adaptation for the accommodation of a patient monitoring video camera.

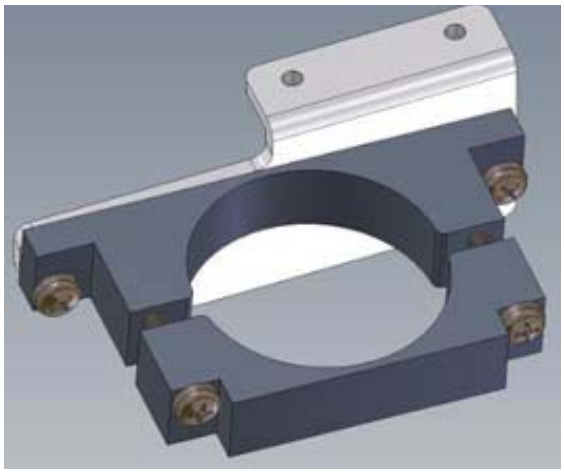

RO 344 Plastic Spacer Guides

Pair of plastic rail guides complete with support designed to accommodate the ionization chamber and ensure its protection.

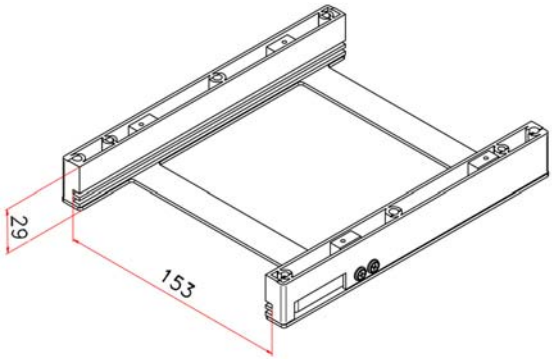

RO 356 Shutter Positioning Control

Supplementary safety device to ensure correct positioning of shutters. It consists of two potentiometers mounted on the collimator: one is mounted on the back of the collimator to control the Long shutters and the other potentiometer is mounted on the side to control the Cross shutters.

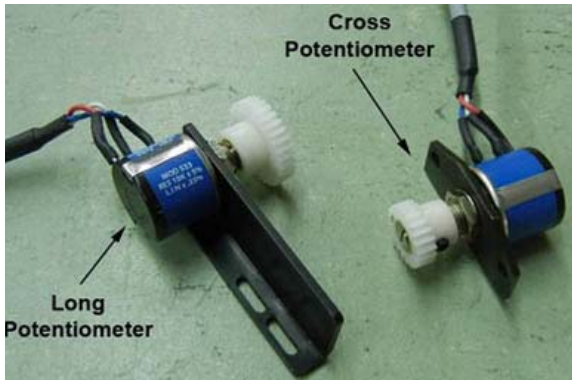

RO 409 Plastic Flange Modification

Plastic flange modified to customer specifications complete with three iron spacers, 1.5 mm thick.

RO 427 Electronic Measuring Device

Device for the electronic measurement of SID. The value is read on the collimator display.

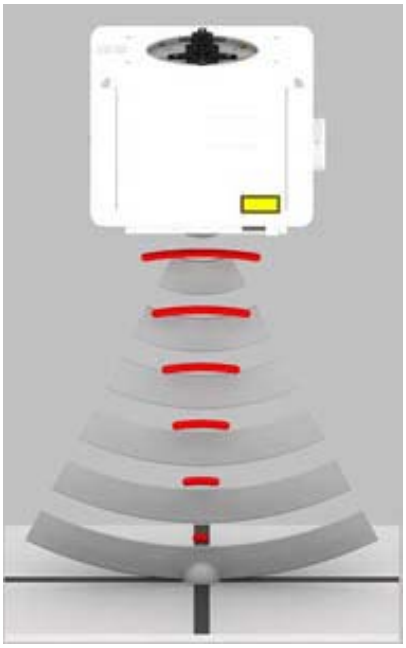

RO 436 Mechanical Adaptation for a Lower Collimator

Modified housing providing a lower collimator.
Collimator cover dimensions: 191 x 244 x 282 cm.

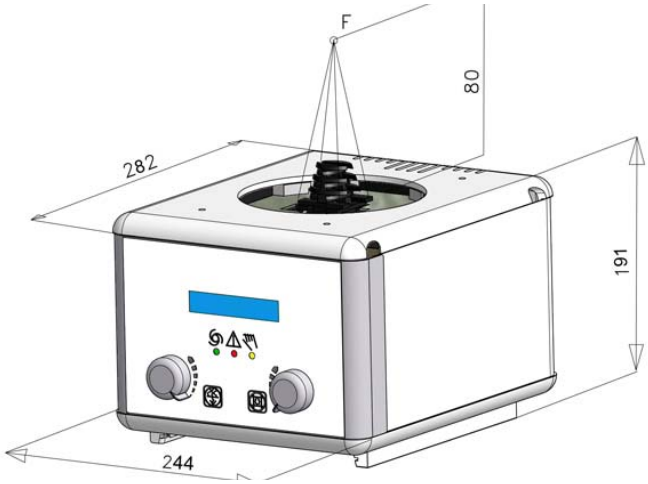

RO 441 Plastic Flange, 50° Rotation

Plastic flange with notch allowing +/- 50° rotation of the collimator without stop, 20 mm thickness.

Available only if collimator is assembled with optional item RO 318.

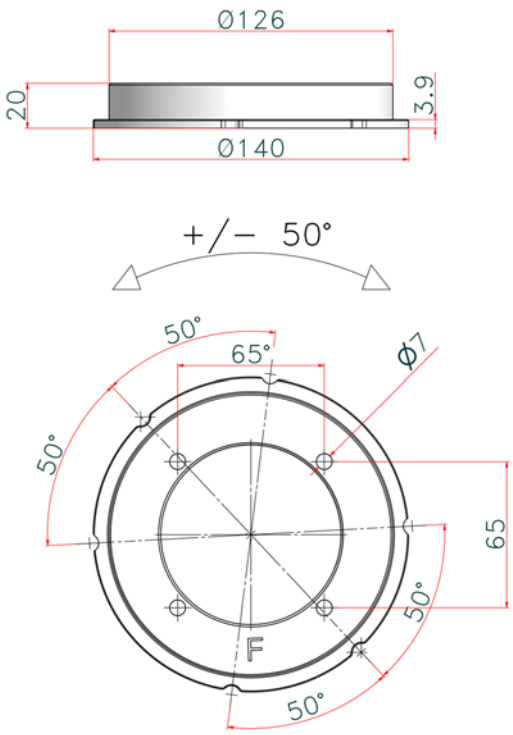

RO 442 Plastic Flange, 90° Rotation

Plastic flange with notch allowing +/- 90° rotation of the collimator without stop, 20 mm thickness.

Available only if collimator is assembled with optional item RO 318.

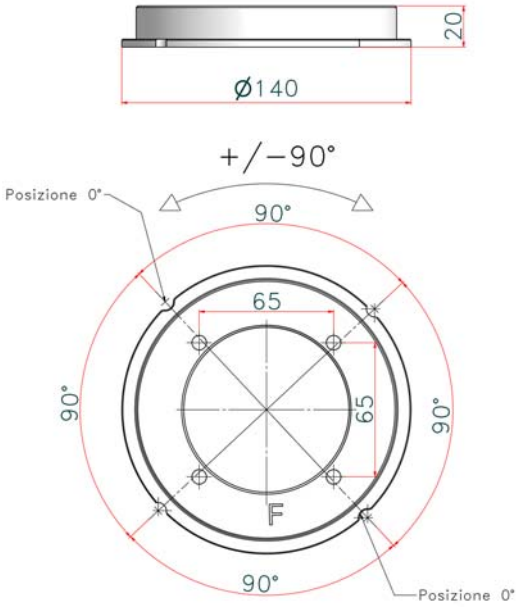

RO 444 CanOpen Protocol

Software that controls the collimator functions via CanOpen protocol.

MAINTENANCE

To ensure constantly safe performance of the collimator and its compliance with applicable regulations, a maintenance program is indispensable.

It is the Owner's responsibility to supply or arrange for this service.

CLEANING RECOMMENDATIONS

- The collimator housing must be cleaned as prescribed by the sanitary regulations followed by the operator.
- Disconnect supply.
- Use non abrasive cleaning products.
  Care must be taken to prevent liquid from entering the collimator. **Please Note: The collimator cover is not watertight.**
- **Do not** reapply power if inflammable liquids have leaked into the collimator.
  See the following Maintenance Instructions.
- Clean the varnished and aluminium surfaces with a damp cloth only, using a neutral cleansing agent then dry the surfaces with a soft cloth.
- Clean chrome surfaces with a dry soft cloth.

Do not spray water or detergent directly over the collimator. The unit's liquid protection level is IPx0.

DISINFECTION

The disinfection method use must conform with the currently applicable norms and directives covering disinfection and protection against explosion hazards.

.

Never use caustic substances, solvents or abrasive detergents.

If products that could form explosive gas mixtures are used, allow the gas to evaporate before starting the system.

- Disconnect supply.
- Disinfect the unit including accessories and cables with a dampened cloth.
- Do not spray the unit with the disinfectant because it could leak into the collimator.

RECOMMENDED MAINTENANCE PROGRAM

Ralco suggests a yearly servicing program, however shorter intervals are advisable when the collimator is subject to heavy workloads.

- Re-calibration of the collimator will be necessary whenever the X-ray tube is changed or at each substitution of the lamp used to simulate the light field.
- Calibration procedures must be performed as described in this manual.
- Check once a week that the screws and tabs which serve to secure the collimator to the flange/tube adapter are correctly tightened.
- Remove the covers and panels from collimator. Inspect the moving parts for signs of wear or damage.
- Check the electric system and substitute parts that show wear.
- Check the plastic anti-dust window and substitute it if necessary.
- Clean the collimator with a soft cloth paying particular attention to the plastic anti-dust window. Do not use abrasive or inflammable cleaning products.

- Wipe away all excess oil and remount the cover.

	MAKE SURE TO TIGHTEN THE ALLEN SCREWS SECURING THE COLLIMATOR OR THE CONTROL TABS. APPROPRIATE TIGHTENING OF THE 4 ALLEN SCREWS ENSURES SECURE MOUNTING OF THE COLLIMATOR. TIGHTENING FORCE USED MUST NOT EXCEED 0.50 NM.

	IF THE COLLIMATOR IS TO BE MOUNTED ON A ROTATING FLANGE, USE A TIGHTENING FORCE BETWEEN MIN. 0,50 NM AND MAX. 0.75 NM.

GENERAL

REPAIRS

In the event the customer finds any noncompliance or malfunctions of the collimator, contact Ralco via e-mail at the address: p.vescera@ralco.it (Ralco Assistance).

The information must include:

- The model and serial number of the collimator found on the label.
- A detailed description of the problem (in Italian or English).
- It is important to specify if you want a repair or a total refurbishment of the product.

Ralco will resolve the problem by either providing directions, and/or field service or by sending replacement parts.

In the event the collimator needs to be repaired at Ralco, customer service will immediately provide the customer with a RMA (Return Merchandise Authorization) number as your consent to the return and provide all necessary additional information.

The shipping of the unit is at the customer's expense if the unit is out of warranty, see paragraph **WARRANTY** in this chapter.

Ralco reserves the right to decide if the collimator is to be repaired or substituted.

Defective material is to be sent to:

RALCO SRL
VIA DEI TIGLI 13/G
20853 BIASSONO (MB) - ITALIA
FAX: ++39-039-2497.799
EMAIL: RALCO@RALCO.IT

END OF LIFE DISPOSAL

Your collimator contains materials which can be recycled and reused. Specialised companies can recycle your product to increase the amount of reusable materials and to minimize the amount of materials to be disposed of.

The product contains lead which can be highly contaminating if dispersed incorrectly. The following symbol signifies that the product conforms to the environmental requirements of directives 202/95/EC, 2002/96/EC, 2003/108/EC; it must be disposed of correctly at the end of its life-cycle.

The collimator does not contain polluting materials or products with the exception of the lead that composes the shutters - avoid direct contact with lead especially for prolonged periods.

It is required that you observe Local Laws regulating the disposal of the collimator using certified environmental management entities. Should this prove impossible, return the collimator to Ralco at the purchaser's expense and Ralco will undertake its correct disposal.

If you are replacing the unit with new equipment, you may return the old collimator to Ralco. Please contact us if you require further information.

WARRANTY

Ralco undertakes to replace and repair any collimator part during a period of 24 months from the date of invoice and cover the labour costs involved, not including the exemptions below.

The warranty applies provided the product has been handled properly in accordance with its operating instructions; presentation is required of the original invoice indicating the date of purchase, the model and serial number as well as other documents originally supplied with the set.

Exemptions:
- If unit documents have been altered in any way or made illegible;
- If the model or production number on the product has been altered, deleted, removed or made illegible;
- If repairs or product modifications and alterations have been performed by **unauthorized and unqualified persons**;
- If unauthorized repairs and/or modifications have been performed;
- To damage caused by misuse or neglect, incorrect installation or accidental damage including but not limited to lighting, water or fire;
- To use of unoriginal spare parts and accessories.

In-warranty spares will be available only upon return to Ralco, at the customer's expense, of the parts considered to be faulty to allow Ralco to assess the cause of the fault.

Components Not Covered by this Warranty

- Consumable items such as lamps.

Items not produced by Ralco; these items will be accorded to warranty granted by the constructor:
- Motors: 1 year
- Potentiometers: 1 year
- Electronic Boards: 1 year
- Laser: 1 year

Disassembly

Care must be taken not to let the collimator fall.

- Disconnect supply to the collimator.
- Remove the cover and disconnect the supply cables.
- Loosen the fixing Allen screws on the upper part of the collimator connected to the flange mounted to the X-ray tube.

Transport and Storage

- Suitable packing must be provided for the collimator.
- Place the collimator in a plastic bag to avoid packing material from entering the collimator.
- Use an appropriate packing for transport, shipment or storage; the collimator must be protected from rough handling. This will avoid damage to the collimator during transport, shipment or storage.
- Limit Storage conditions:
- Ambient Temperature = from -40°C to +70°C
- Relative Humidity = from 10% to 95%

- Atm. Pressure = from 500 a 1060 hPa.

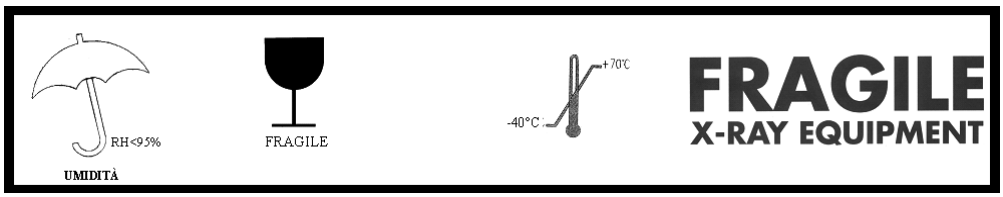

images\collimatori\fig

SAFETY/RESPONSIBILITY

Ralco adheres to the directives governing manufacturers of electro-medical equipment:

Directive 2007/47/CE para.10 -Legislative Decree n° 46 para.10

Ralco shall not be held responsible when instructions provided in the present manual are not complied with. Ralco shall not be held responsible if the collimator relates to one or several of the following instances:

- The unit is of Ralco construction, built to client specifications with no CE marking.
- The unit has been modified by the OEM or end user.
- The unit has been installed without respecting the instructions provided in this manual.
- The unit is used without respecting the instructions provided in this manual.
- The unit has not been subject to routine functional inspection.
- The unit has not been subject to routine maintenance.
- The unit has been repaired with unoriginal spare parts.
- Ralco shall decline all responsibility for any damage, direct or indirect, caused to persons or things by inappropriate accessories.

INFORMATION REGARDING ACCIDENTS THAT HAVE OCCURRED WHILE USING THE RADIOLOGICAL COLLIMATOR MUST BE REPORTED IMMEDIATELY TO RALCO SRL.

RESIDUAL RISKS

The collimator has been constructed to current standards to meet the safety requisites of directive 2007/47/CE. However, due to the presence of x-rays, the type of application implies a residual risk derived from possible faults that could occur during operation of the unit.

The Instructions contained in the this Manual will ensure the correct use of the device and reduce the causes of possible hazards.

The residual risks of the device are reasonable; they have been assessed and approved in the related Risk Management Plan contained the Technical Report.

Information For The Manufacturer *The following form is provided for your comments and suggestions with regards to the collimator so that we may ensure and improve the quality of our production.* *Please e-mail comments and/or suggestions to: p.vescera@ralco.it*
Date:
Customer:
Information regarding possible accidents that may have occurred while using the collimator. *Directive 2007/47/CE states that accidents (such as death or grievous injury to a patient) that involve the collimator described herein, must be reported to the Ministry of Health and to the Manufacturer.* *The present form is provided to report to Ralco srl post-free.*
Date:
Customer: